PHILIPPGROUP

Recess former for diagonal tension system



VB3-T-079-en - 06/25 - PDF

Installation and Application Instruction

Our products from the division
BUILDING SOLUTIONS

SERVICES

- On-site tests -> we ensure that your requirements are properly covered by our planning.
- Test reports -> for your safety and documentation.
- Training -> the knowledge of your employees in planning and production is enhanced by our experts on site, online or via webinar.
- Planning support -> the latest design software, planning documents, CAD data and much more can be downloaded at any time from www.philipp-group.com.

HIGH DEMANDS ON PRODUCT SAFETY AND PRACTICALITY

- Close cooperation with notified bodies and - if necessary - approval of our solutions.

TECHNICAL DEPARTMENT

- Our expert team will support you at any time during your planning phase with detailed advice.





CONTENTS

RECESS FORMER FOR DIAGONAL TENSION SYSTEM	**Page**	**4**
General notes / reinforcement information	Page	5
Materials	Page	5
Corrosion protection	Page	5
Element thicknesses, centre and edge distances	Page	5
Concrete compressive strength	Page	5
Load directions	Page	5
Minimum reinforcement	Page	5
Single-layer reinforcement	Page	5
THREADED TRANSPORT ANCHOR - STRAIGHT TAIL	**Page**	**6**
Description	Page	6
Declaration of Conformity	Page	6
PERMISSIBLE LOAD-BEARING CAPACITIES AND BOUNDARY CONDITIONS	**Page**	**7**
For axial tension / diagonal tension	Page	7
COMPACT ANCHOR	**Page**	**8**
Description	Page	8
Declaration of Conformity	Page	8
PERMISSIBLE LOAD-BEARING CAPACITIES AND BOUNDARY CONDITIONS	**Page**	**9**
For axial tension / diagonal tension	Page	9
RECESS FORMER SZ15	**Page**	**10**
Plastic recess former SZ15	Page	10
Key for Plastic recess former SZ15	Page	11
Steel recess former SZ15	Page	12
INSTALLATION OF THE SYSTEM	**Page**	**13**

RECESS FORMER FOR DIAGONAL TENSION SYSTEM

Using a Recess former for diagonal tension SZ15 an installation of a possible Threaded transport anchor results in an anchor axis inclined by 15° to the concrete surface. This allows diagonal tension at angles of up to β_{max} 30° without the installation of additional reinforcement (U-bar).

Combinations:

- **Lifting devices**
  - Lifty
  - Lifty DS
  - Lifting loop
  - Lifting loop plus
- **Recess former** SZ15
  - Plastic recess former
  - Steel recess former
- **Sealing cap (plastic)**
  - Outside cap (72ASS__)
  - Sealing cap (72KAS__)
- **Marking ring**
  - Marking ring (74KR__)
- **Transport anchor**
  - Threaded transport anchor - straight tail
  - Compact anchor

COMBINATIONS

A combination of the Recess former for diagonal tension with other threaded anchors as well as lifting devices is not permitted.

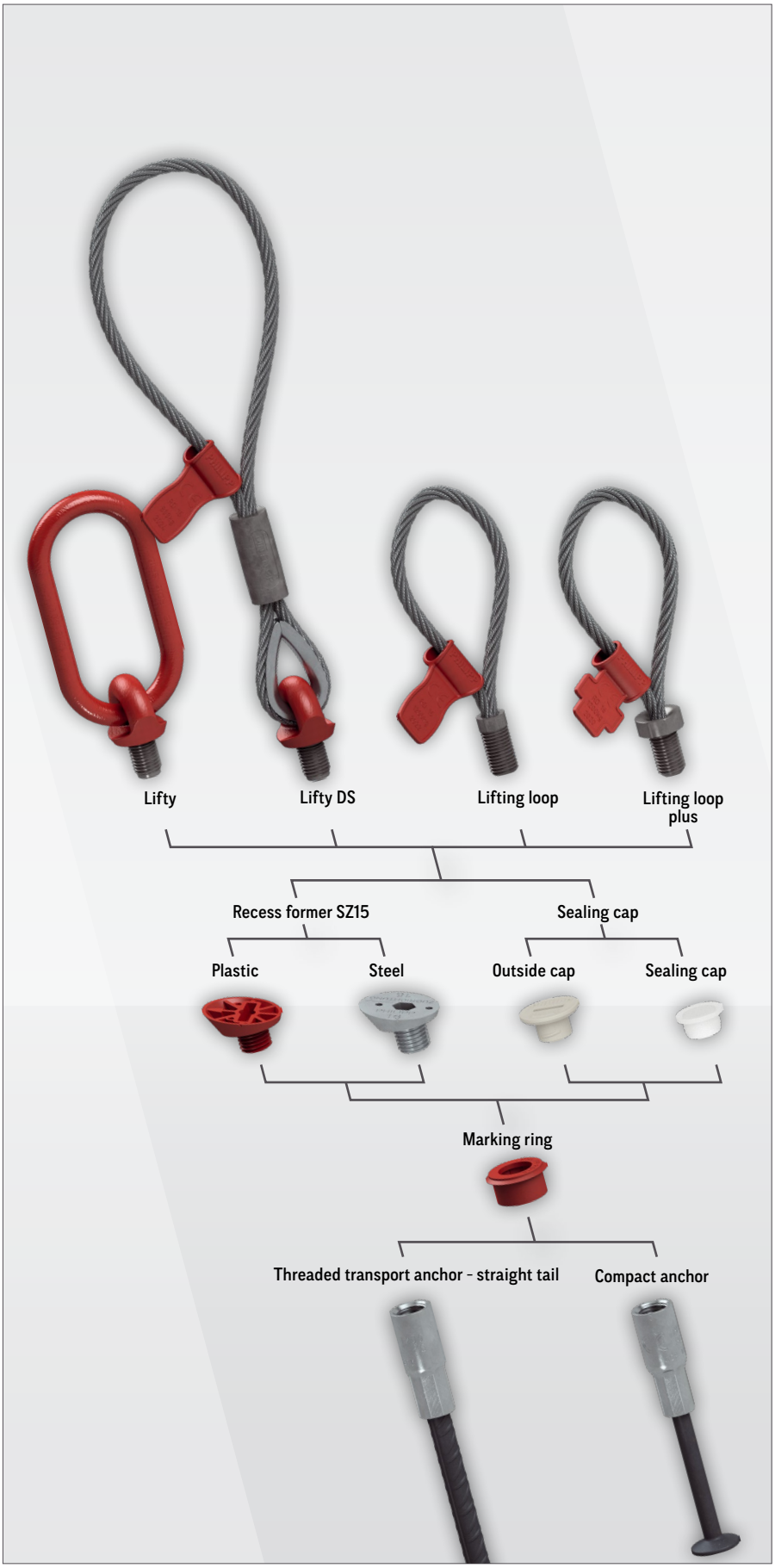

MATERIALS

The Threaded transport anchor with straight tail consists of a straight reinforcing bar B500B with crimped-on insert. In contrast, the Compact anchor consists of a round steel with a foot and a crimped-on insert. All inserts are made of special high precision steel tubes and are galvanized according to common standards. This galvanizing provides temporary corrosion protection during storage at the precast concrete plant and up to final installation in the concrete element.

CORROSION

In order to avoid contamination or damage to the concrete surface of the precast element due to corrosion of the anchor (rust staining or similar), the insert is also available in stainless steel alternatively. Here the cut surface of the reinforcing bar is protected by a special sealing against corrosion.

ELEMENT THICKNESSES, CENTRE AND EDGE DISTANCES

The installation of Threaded transport anchors in precast concrete elements requires minimum element thicknesses and centre/edge distances for a safe load transfer (table 2 or 4).

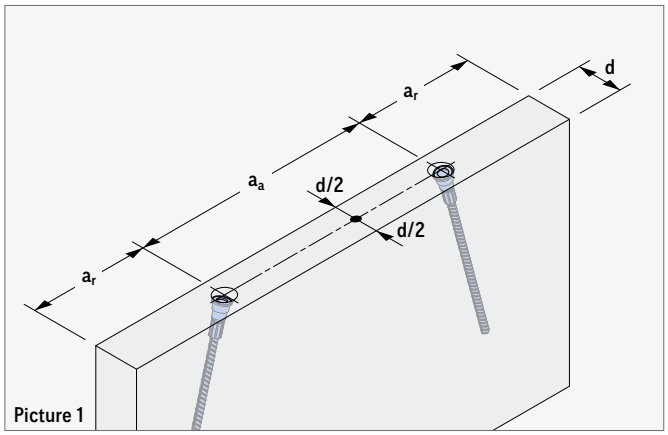

Picture 1

CONCRETE COMPRESSIVE STRENGTH

At the time of the first lift the concrete must have a minimum strength f_{cc} acc. to table 2 or 4. Given concrete strengths f_{cc} refer to cube compressive strengths at the time of the first lift.

LOAD DIRECTIONS

Due to the 15° inclined installation of the Threaded transport anchor an axial load as well as a diagonal load direction β_{max} 30° is possible. Basically, a lateral load on the anchors up to γ_{max} 7.5° during transport of the elements is allowed. If an element is produced on a tilting table an angle up to γ_{max} 15° is possible.

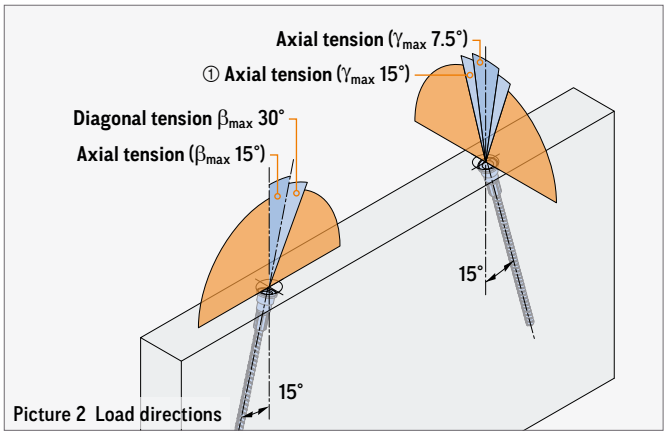

Picture 2 Load directions

① Only possible when using a tilting table!

MINIMUM REINFORCEMENT

For the use of Threaded transport anchors precast units shall be reinforced with a minimum reinforcement according to table 2 or 4. This minimum reinforcement can be replaced by comparable reinforcing bars. The user is personally responsible for ensuring that the loads are safely transferred into the concrete element.

EXISTING REINFORCEMENT

Any existing static or constructive reinforcement can be taken into account for the minimum reinforcement.

SINGLE-LAYER REINFORCEMENT

In order to ensure a centred position of the anchor in the element, the mesh reinforcement has to be installed asymmetrically within the element in case of a single-layer reinforcement (see picture 3).

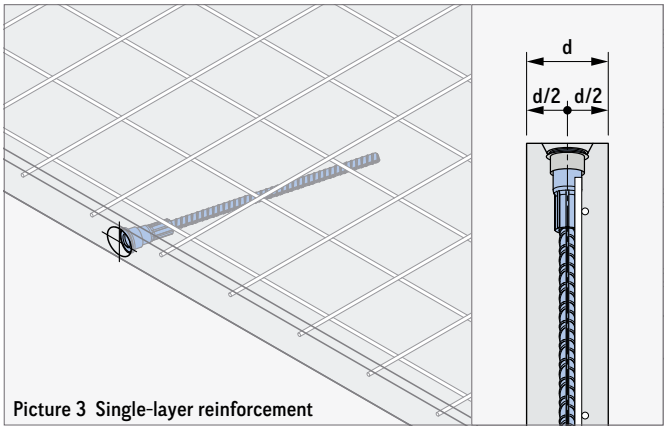

Picture 3 Single-layer reinforcement

THREADED TRANSPORT ANCHOR - STRAIGHT TAIL

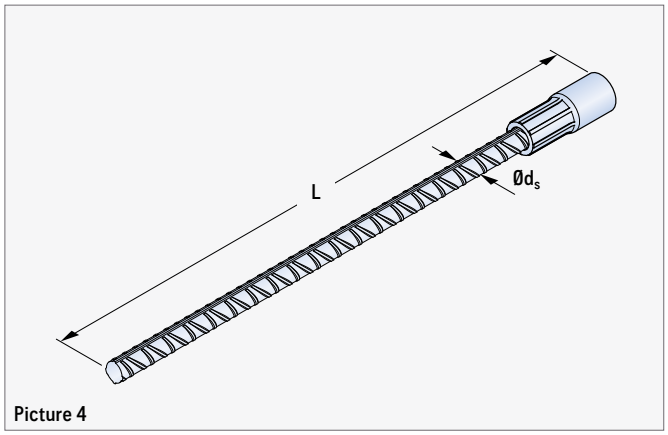

Picture 4

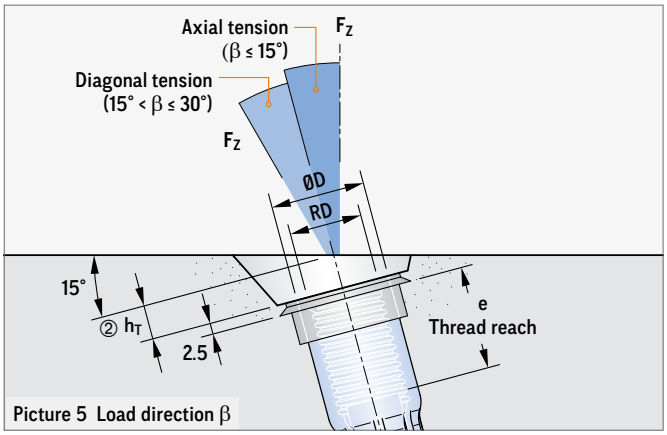

Picture 5 Load direction β

The Threaded transport anchor with straight tail is used for a face-side installation in wall-like elements. It is part of the PHILIPP Transport anchor system and complies with the VDI/BV-BS Guideline "Lifting inserts and lifting systems for precast concrete elements" (VDI/BV-BS 6205).

The use of Threaded transport anchors requires the compliance with this Installation and Application Instruction as well as the General Installation and Application Instruction. The Application Instructions for the belonging PHILIPP Lifting devices (Lifty, Lifty DS, Lifting loop and Lifting loop plus) shall be followed also. The anchor may only be used in combination with the before-mentioned PHILIPP lifting devices.

Threaded transport anchors are designed for the transport of precast concrete units only. Multiple use within the transport chain (from production to installation of the unit) does not constitute repeated use. Repeated use (e.g as crane ballast) or a permanent fixation is not permitted.

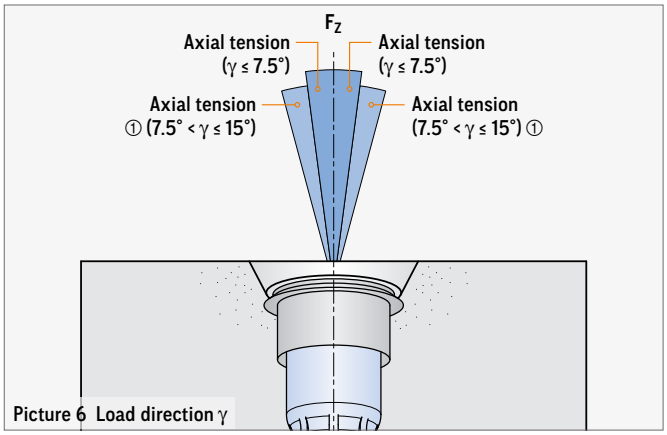

Picture 6 Load direction γ

① Only possible when using a tilting table!

DECLARATION OF CONFORMITY

The Declaration of Conformity (DoC) for the Threaded Transport anchor can be downloaded from our website www.philipp-group.com or is available on request.



TABLE 1: DIMENSIONS THREADED TRANSPORT ANCHOR - STRAIGHT TAIL

Ref. no. ③ galvanised	Type	Dimensions RD	ØD (mm)	L (mm)	e (mm)	Ød$_s$ (mm)	Weight (kg/100 pcs.)
67M16	RD 16	16	21.0	275	27	12	28.0
67M20	RD 20	20	27.0	355	35	16	64.0
67M24	RD 24	24	31.0	405	43	16	76.0
67M30	RD 30	30	39.5	505	56	20	116.0
67M36	RD 36	36	47.0	690	68	25	310.0
67M42	RD 42	42	54.0	840	75	28	470.0
67M52	RD 52	52	67.0	900	95	32	714.0

① Mind the embedment depth h$_T$ of the recess former SZ15 (picture 5, table 6 or 8).
③ Also available in stainless steel version (ref. no. 75M__VA).

PERMISSIBLE LOAD-BEARING CAPACITIES AND BOUNDARY CONDITIONS

If the Threaded transport anchor is used under axial and diagonal tension $\beta > 30°$ an additional reinforcement according to table 2 is required.

LATERAL AND DIAGONAL TENSION

A lateral load on the anchors of more than γ_{max} 7.5° is not permitted during transport! If the element is produced on a tilting table an angle up to γ_{max} 15° is possible. Also a diagonal load with an angle $\beta > 30°$ is not permitted!

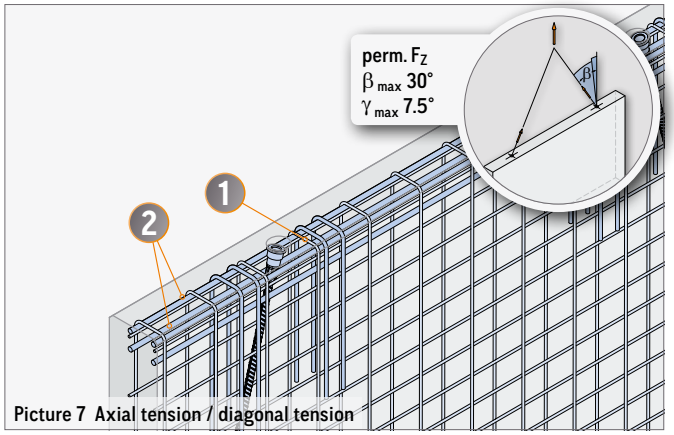

Picture 7 Axial tension / diagonal tension

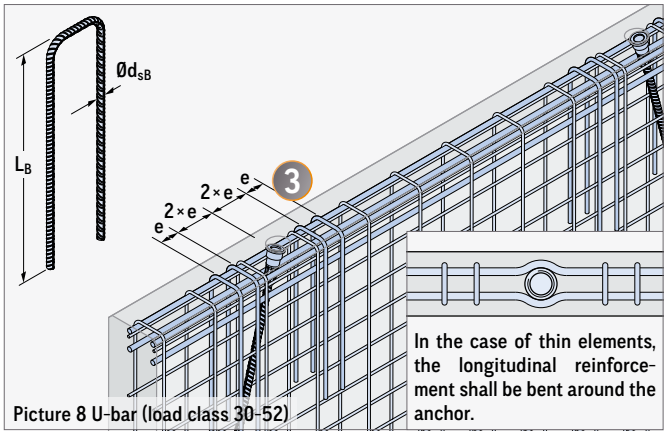

In the case of thin elements, the longitudinal reinforcement shall be bent around the anchor.

Picture 8 U-bar (load class 30-52)

TABLE 2: AXIAL AND DIAGONAL TENSION

Load class	Min. element thicknesses min. centre and edge distances			β_{max} 30° / γ_{max} 7.5° ① perm. F_Z f_{cc} (N/mm²)						① Mesh reinforcement (square)	② Longitudinal reinforcement n × Ø / length	③ U-bar			
	d	a_a	a_r	≥ 15.0	≥ 17.5	≥ 20.0	≥ 22.5	≥ 25.0	≥ 27.5			Number	$Ød_{sB}$	L_B	e
	(mm)	(mm)	(mm)	(kN)	(kN)	(kN)	(kN)	(kN)	(kN)	(mm²/m)		(pcs.)	(mm)	(mm)	(mm)
16	60	400	200	9.1	9.8	10.5	10.5	10.5	10.5	1 × #188	-	-	-	-	-
20	100	600	300	18.9	20.0	20.0	20.0	20.0	20.0	2 × #188 ④	-	-	-	-	-
24	100	600	300	24.6	25.0	25.0	25.0	25.0	25.0	2 × #188 ④	-	-	-	-	-
30	100	900	450	-	-	40.0	40.0	40.0	40.0	2 × #188 ④	2 × 2 Ø8 / 800	-	-	-	-
	120	700	350	38.6	40.0	40.0	40.0	40.0	40.0	2 × #188 ④	-	-	-	-	-
36	100	1200	600	-	-	63.0	63.0	63.0	63.0	2 × #257 ④	2 × 2 Ø8 / 1100	4	Ø8	400	50
	120	900	450	60.5	63.0	63.0	63.0	63.0	63.0	2 × #188 ④	-	-	-	-	-
42	120	1200	600	-	-	80.0	80.0	80.0	80.0	2 × #257 ④	2 × 2 Ø8 / 1100	4	Ø8	400	50
	140	1100	550	70.1	75.8	78.1	78.1	78.1	78.1	2 × #188 ④	-	-	-	-	-
				70.1	75.8	80.0	80.0	80.0	80.0	2 × #257 ④	-	-	-	-	-
52	140	1200	600	-	-	93.0	98.7	104.0	109.1	2 × #257 ④	2 × 2 Ø8 / 1100	4	Ø8	400	50
	150	1200	600	-	86.9	92.9	95.0	95.0	95.0	2 × #188 ④	-	-	-	-	-
				125.0	125.0	125.0	125.0	125.0	125.0	2 × #257 ④	2 × Ø10 / 1100	-	-	-	-

① If a tilting table is used an angle of γ_{max} 15° is possible!
④ The mesh reinforcement shall be in the form of a double-bent mesh reinforcement or with equivalent stirrups.

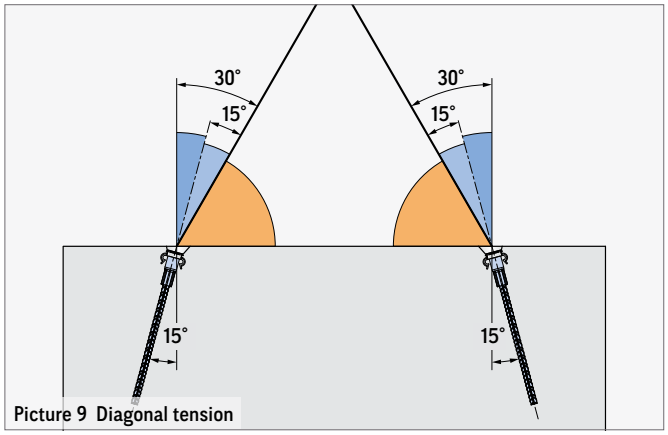

Picture 9 Diagonal tension

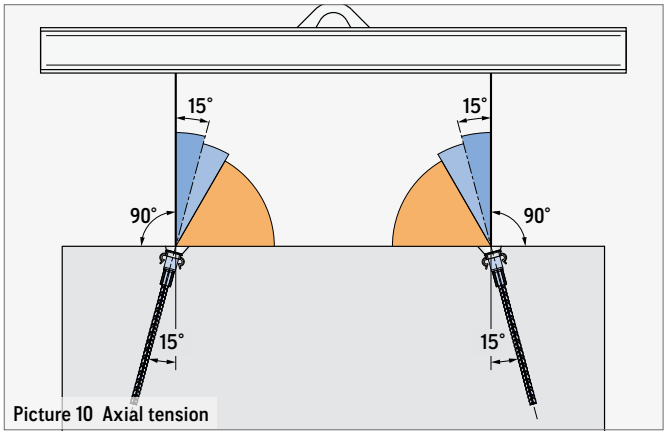

Picture 10 Axial tension

COMPACT ANCHOR

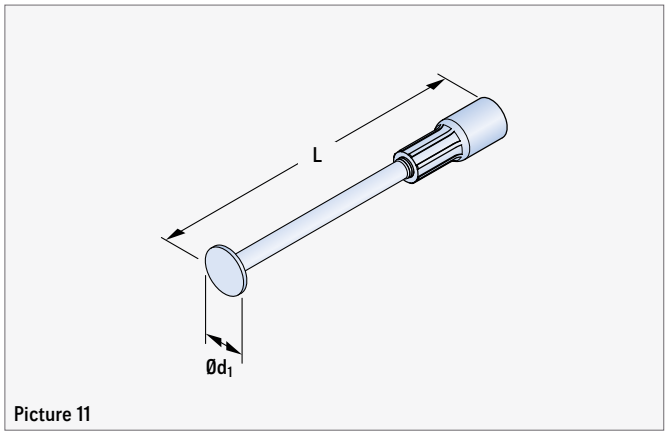

Picture 11

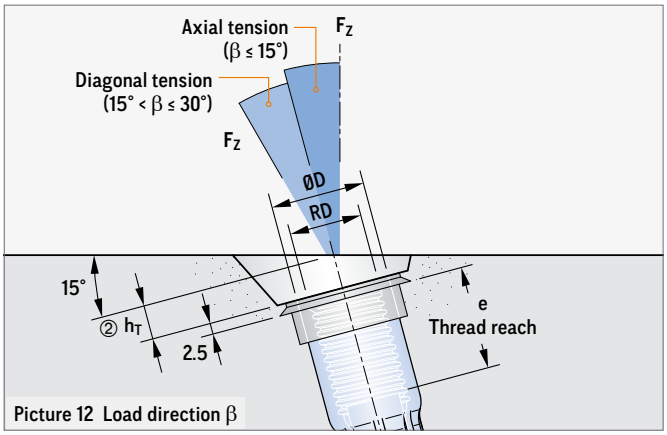

Picture 12 Load direction β

The Compact anchor is used for face-side installation in wall-like elements. It is part of the PHILIPP Transport anchor system and complies with the VDI/BV-BS Guideline "Lifting inserts and lifting systems for precast concrete elements" (VDI/BV-BS 6205).
The use of Compact anchors requires the compliance with this Installation and Application Instruction as well as the General Installation and Application Instruction. The Application Instructions of the belonging PHILIPP Lifting devices (Lifty, Lifty DS, Lifting loop and Lifting loop plus) shall be followed also. The anchor may only be used in combination with the before-mentioned PHILIPP lifting devices.
Compact anchors are designed for the transport of precast concrete units only. Multiple use within the transport chain (from production to installation of the unit) does not constitute repeated use. Repeated use (e.g as crane ballast) or a permanent fixation is not permitted.

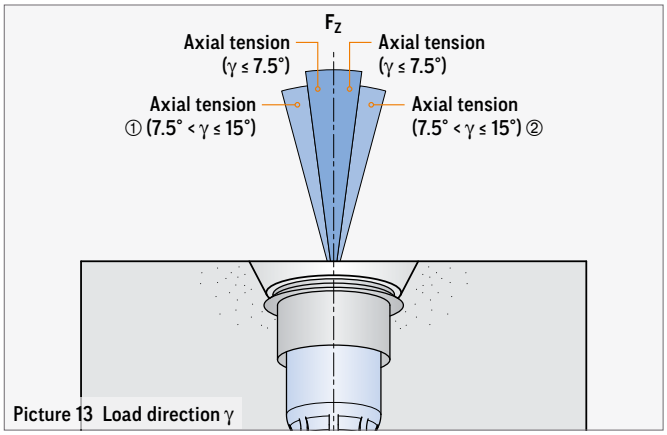

Picture 13 Load direction γ

① Only possible when using a tilting table!

DECLARATION OF CONFORMITY

The Declaration of Conformity (DoC) for the Compact anchor can be downloaded from our website www.philipp-group.com or is available on request.



TABLE 3: DIMENSIONS COMPACT ANCHOR

Ref. no. ③ galvanised	Type	Dimensions RD	ØD (mm)	L (mm)	e (mm)	Ød1 (mm)	Weight (kg/100 pcs.)
67K160130	RD 16	16	21.0	130	27	25	14.0
67K200185	RD 20	20	27.0	185	35	35	34.0
67K240200	RD 24	24	31.0	200	43	35	42.0
67K300275	RD 30	30	39.5	275	56	50	105.0
67K360334	RD 36	36	47.0	334	68	60	184.0
67K420385	RD 42	42	54.0	385	75	85	273.0
67K520550	RD 52	52	67.0	550	100	85	567.0

① Mind the embedment depth h_T of the recess former SZ15 (picture 12, table 6 or 8).
③ Also available in stainless steel version (ref. no. 75K_____VA).

PERMISSIBLE LOAD-BEARING CAPACITIES AND BOUNDARY CONDITIONS

If the Compact anchor is used under axial and diagonal tension $\beta > 30°$ an additional reinforcement according to table 4 is required.

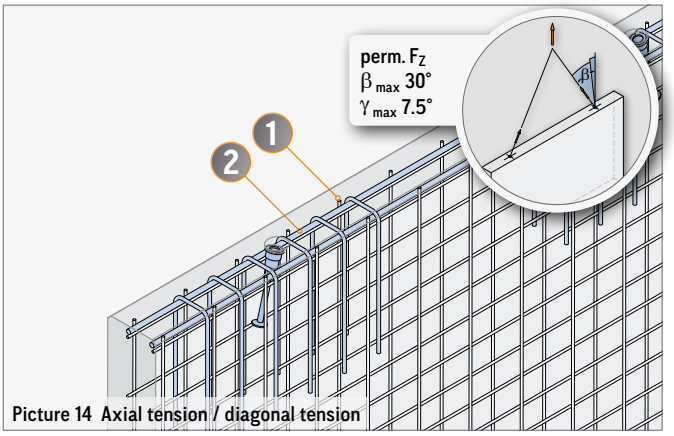

Picture 14 Axial tension / diagonal tension

LATERAL AND DIAGONAL TENSION

A lateral load on the anchors of more than γ_{max} 7.5° is not permitted during transport! If the element is produced on a tilting table an angle up to γ_{max} 15° is possible.
Also a diagonal load with an angle $\beta > 30°$ is not permitted!

TABLE 4: AXIAL AND DIAGONAL TENSION

Load class	Min. element thicknesses min. centre and edge distances			β_{max} 30° / γ_{max} 7.5° ①				
	d	a_a	a_r	perm. F_Z $f_{cc} \geq 15$ N/mm²	perm. F_Z $f_{cc} \geq 17.5$ N/mm²	perm. F_Z $f_{cc} \geq 20$ N/mm²	① Mesh reinf. (square)	② Longitudinal reinf. n × Ø / length
	(mm)	(mm)	(mm)	(kN)	(kN)	(kN)	(mm²/m)	
16	80	400	200	9.1	9.8	10.5	1 × #188	-
20	100	600	300	18.9	20.0	20.0	2 × #188 ④	-
24	120	600	300	25.0	25.0	25.0	2 × #188 ④	-
30	130	700	350	40.0	40.0	40.0	2 × #257	2 × Ø12 / 800
36	160	900	450	63.0	63.0	63.0	2 × #257	2 × Ø12 / 800
42	160	1100	550	80.0	80.0	80.0	2 × #257	2 × Ø12 / 1000
52	200	1200	600	125.0	125.0	125.0	2 × #257	2 × Ø12 / 1200

① If a tilting table is used an angle of γ_{max} 15° is possible!
⑤ The mesh reinforcement shall be in the form of a double-bent mesh reinforcement or with equivalent stirrups.

TABLE 5: ADDITIONAL REINFORCEMENT

Load class	③ U-bar in anchor area (B500A)			
	Number (pcs.)	Ød_{sB} (mm)	L_B (mm)	e (mm)
30	6	8	350	130
36	6	8	400	150
42	6	8	500	150
52	6	10	600	150

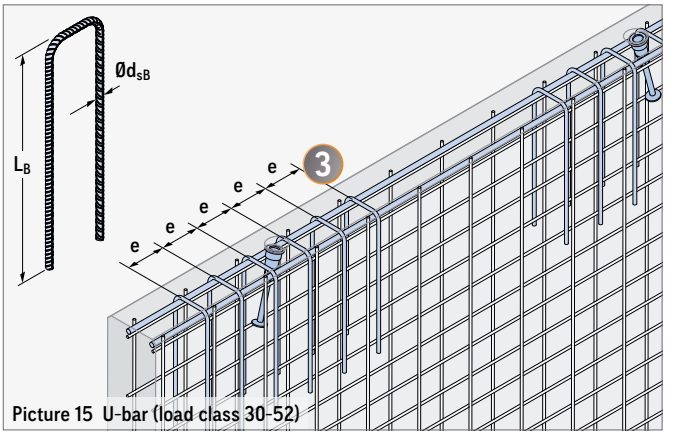

Picture 15 U-bar (load class 30-52)

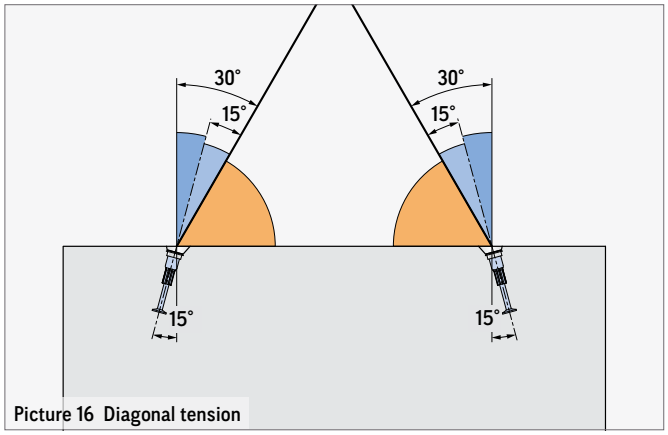

Picture 16 Diagonal tension

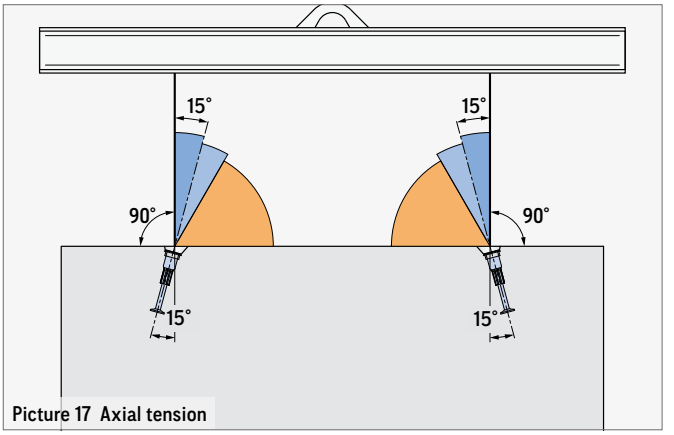

Picture 17 Axial tension

RECESS FORMER SZ15

PLASTIC RECESS FORMER SZ15

Using the Plastic recess former SZ15 Threaded transport anchors can be fixed with an angle of 15° to the formwork. Then, the Threaded transport anchor is screwed onto the recess former attached to the formwork. Depending on the length of the Threaded transport anchor, it may also be necessary to fix it additionally to the reinforcement of the concrete element. After the demoulding, the Plastic recess former SZ15 can be quickly and easily removed e. g. with the PHILIPP tool 72KHNS (page 11).

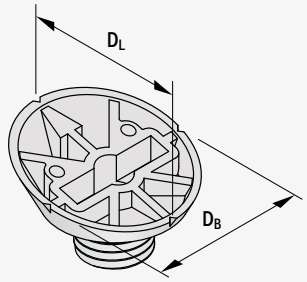

Picture 18 Plastic recess former SZ15

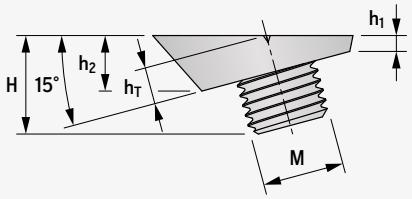

Picture 19

TABLE 6: PLASTIC RECESS FORMER SZ15

Ref. no.	Type RD / M	M	D_L (mm)	D_B (mm)	H (mm)	h_1 (mm)	h_2 (mm)	h_T (mm)	Colour code
72KHN16-SZ15	16	M 16	38.5	38.0	20.5	3.5	11.2	7.5	Flame red
72KHN20-SZ15	20	M 20	55.5	55.0	30.5	3.3	15.0	9.5	Pastel green
72KHN24-SZ15	24	M 24	55.5	55.0	31.0	3.3	15.0	9.5	Jet black
72KHN30-SZ15	30	M 30	72.5	72.0	38.5	3.2	18.7	11.5	Emerald green
72KHN36-SZ15	36	M 36	72.5	72.0	39.0	3.2	18.7	11.5	Light blue
72KHN42-SZ15	42	M 42	99.5	99.0	48.0	3.3	25.5	15.0	Silk grey
72KHN52-SZ15	52	M 52	99.5	99.0	49.5	3.3	25.5	15.0	Sulphur yellow

MARKING

Due to its colour code as well as the marking with the load class (thread size), an easy matching of the recess formers to the Threaded transport anchors to be fixed and the required lifting devices is ensured. For a fast positioning of the recess former to the formwork small notches on the edge are given to mark the anchor axis. In addition, a marking indicates the installation direction (later load direction of the transport anchors).

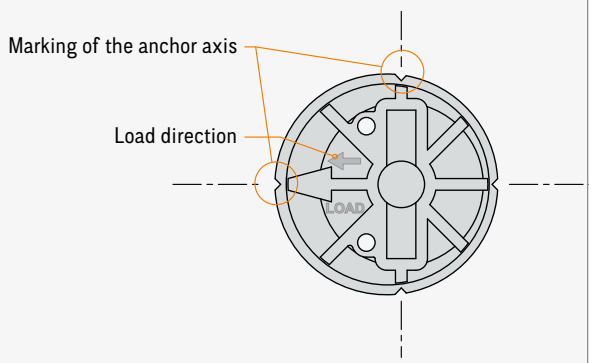

Picture 20 Marking of the Plastic recess former SZ15

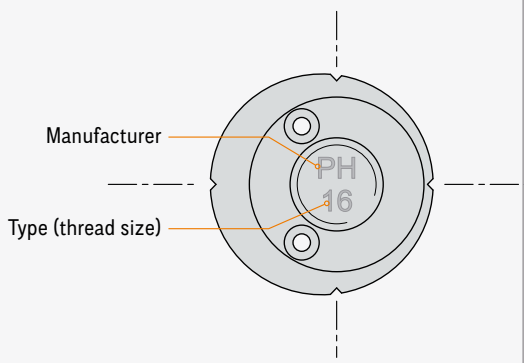

Picture 21 Marking of the Plastic recess former SZ15

KEY FOR PLASTIC RECESS FORMER SZ15

The tool/key is used to easily unscrew the Plastic recess former (72KHN__-SZ15) of the Threaded transport anchors set in concrete. Because of its special design, the tool/key can be used for all sizes (16-52) of the SZ15 system.

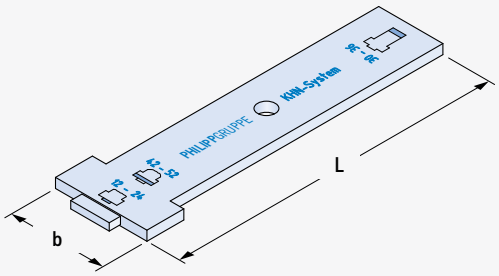

Picture 22

TABLE 7: KEY

Ref. no.	Type	L (mm)	b (mm)
72KHNS	16 - 52	200	57

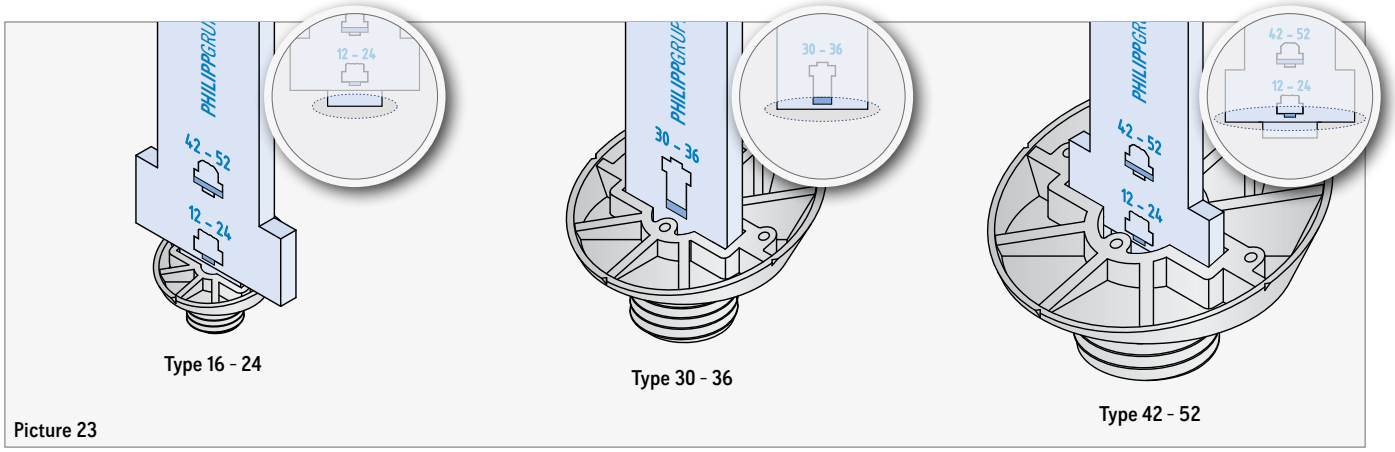

Type 16 - 24

Type 30 - 36

Type 42 - 52

Picture 23

RECESS FORMER SZ15

STEEL RECESS FORMER SZ15

By using the Steel recess former SZ15 Threaded transport anchors can be fixed with screws (with metric thread) or nails with an angle of 15° to the formwork. Then, the Threaded transport anchor is screwed onto the recess former attached to the formwork.

Depending on the length of the Threaded transport anchor, it may also be necessary to fix it additionally to the reinforcement of the concrete element. After demoulding, the Steel recess former SZ15 can be quickly and easily removed with an Allen key (see table 8).

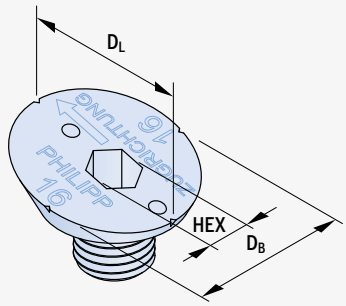

Picture 24 Steel recess former SZ15

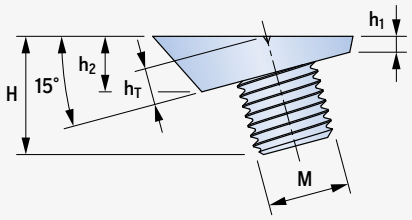

Picture 25

TABLE 8: STEEL RECESS FORMER SZ15

Ref. no.	Type RD / M	M	D_L (mm)	D_B (mm)	H (mm)	h_1 (mm)	h_2 (mm)	h_T (mm)	HEX (mm)
72KHN16-SZ15ST	16	M 16	38.5	38.0	23.5	3.5	11.2	7.5	8
72KHN20-SZ15ST	20	M 20	55.5	55.0	30.5	3.3	15.0	9.5	10
72KHN24-SZ15ST	24	M 24	55.5	55.0	31.0	3.3	15.0	9.5	10
72KHN30-SZ15ST	30	M 30	72.5	72.0	38.0	3.2	18.7	11.5	10
72KHN36-SZ15ST	36	M 36	72.5	72.0	39.0	3.2	18.7	11.5	10
72KHN42-SZ15ST	42	M 42	99.5	99.0	48.0	3.3	25.5	15.0	10
72KHN52-SZ15ST	52	M 52	99.5	99.0	50.0	3.3	25.5	15.0	10

MARKING

In order to match the right recess former to the corresponding Threaded transport anchor to be fixed the recess former is marked with the load class (thread size).
For a fast positioning of the recess former to the formwork small notches on the edge are given to mark the anchor axis.
In addition, a marking indicates the installation direction (later load direction of the transport anchors).

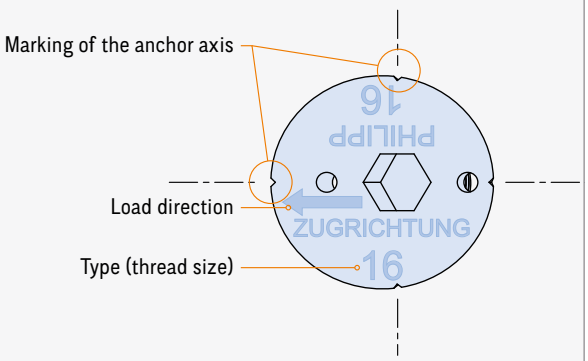

Picture 26 Marking of the Steel recess former SZ15

INSTALLATION OF THE SYSTEM

The Recess former SZ15 is fixed to the formwork at the intended position with nails, screws or glue. Here, the marking of the tensile direction (later load direction of the anchors) has to be followed. This must point in the direction of the wall centre (centre of gravity, picture 28). For an exact positioning, the notches at the edge of the recess former are used (picture 29). A precise positioning on the formwork is necessary, as otherwise e. g. a twisting of the recess former will lead to a misalignment of the anchor and thus the full load-bearing capacity is not given anymore (picture 16). Now, the Threaded transport anchor can be screwed onto the fixed recess former.

Depending on the length of the Threaded transport anchor, it may be necessary to fix it additionally to the reinforcement of the concrete element. After demoulding, the recess former can be quickly and easily removed with an Allen key (HEX see table 8).

DIRT INSIGHT OF THE HEXAGON SOCKET

In order to avoid dirt insight of the hexagon socket (e. g. caused by cement slurry), it can be protected with adhesive tape.

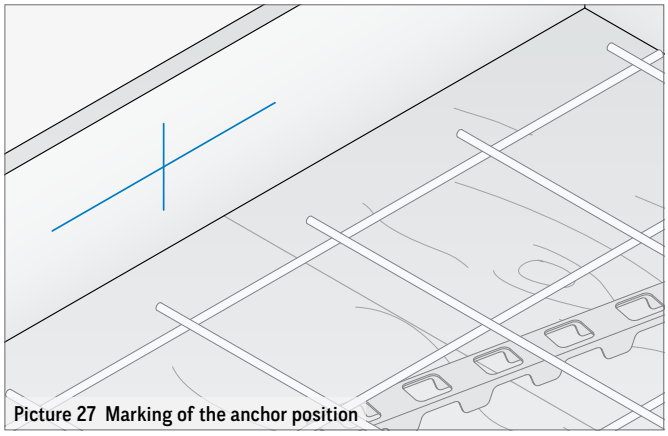

Picture 27 Marking of the anchor position

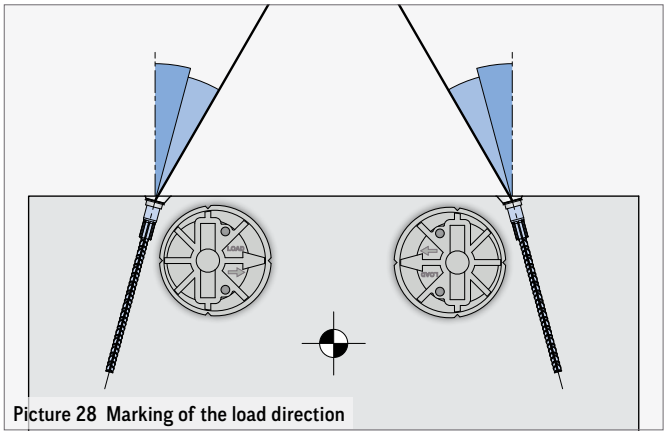

Picture 28 Marking of the load direction

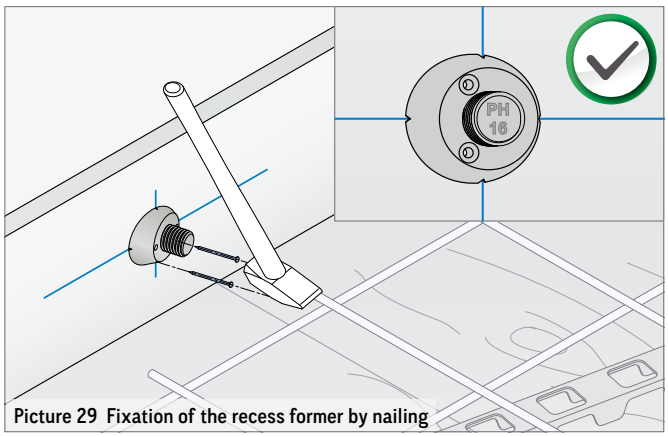

Picture 29 Fixation of the recess former by nailing

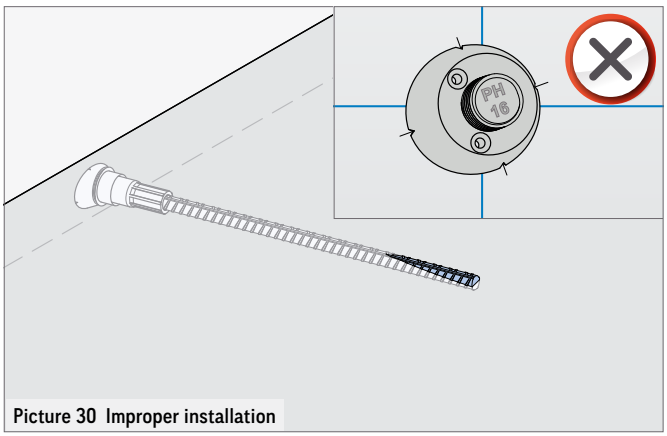

Picture 30 Improper installation

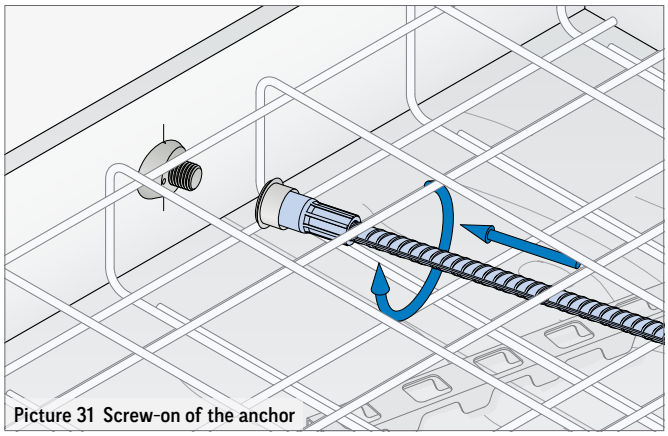

Picture 31 Screw-on of the anchor

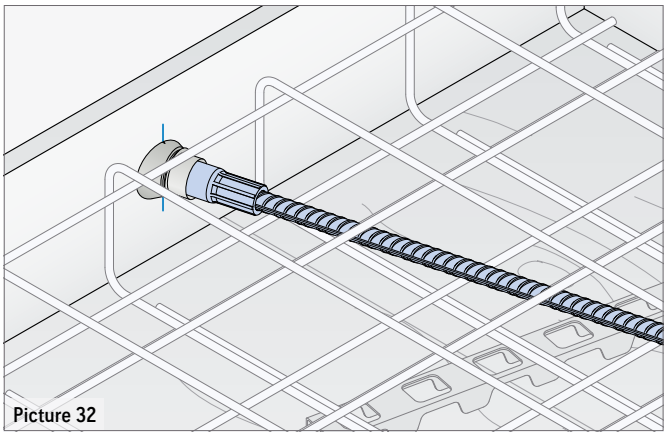

Picture 32

PHILIPPGROUP

HEADQUARTERS
Lilienthalstraße 7-9
63741 Aschaffenburg
+49 6021 4027-0
info@philipp-gruppe.de

PRODUCTION AND LOGISTICS
Hauptstraße 204
63814 Mainaschaff
+49 6021 4027-0
info@philipp-gruppe.de

OFFICE COSWIG
Roßlauer Straße 70
06869 Coswig/Anhalt
+49 34903 694-0
info@philipp-gruppe.de

OFFICE NEUSS
Sperberweg 37
41468 Neuss
+49 2131 35918-0
info@philipp-gruppe.de

OFFICE TANNHEIM
Robert-Bosch-Weg 12
88459 Tannheim/Allgäu
+49 8395 81335-0
info@philipp-gruppe.de

PHILIPP VERTRIEBS GMBH
Pfaffing 36
5760 Saalfelden / Salzburg
+43 6582 70401
info@philipp-gruppe.at

PHILIPP POLSKA SPÓŁKA Z O.O.
ul. Wojska Polskiego 1
47-220 Kędzierzyn-Koźle / Opole
+48 50 3353816
polska@philipp-gruppe.de



HEADQUARTERS Aschaffenburg



Visit us! www.philipp-group.com

VB3-T-079-en - 06/25 - PDF · PHILIPP GmbH, 63741 Aschaffenburg · Technical changes and errors reserved