fischer × PHILIPPGROUP

PRODUCT OVERVIEW

CAST-IN ANCHOR CHANNELS AND CHANNEL BOLTS



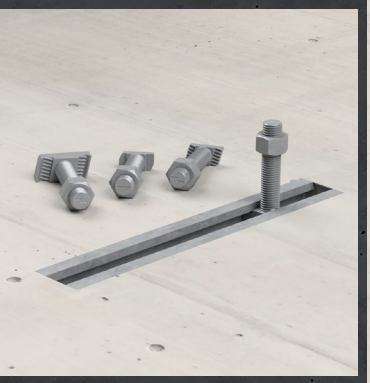

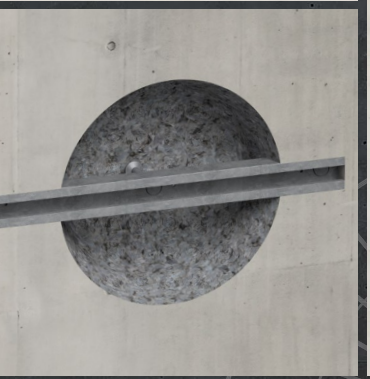



PORTFOLIO 360°

PRODUCTS AND SERVICES

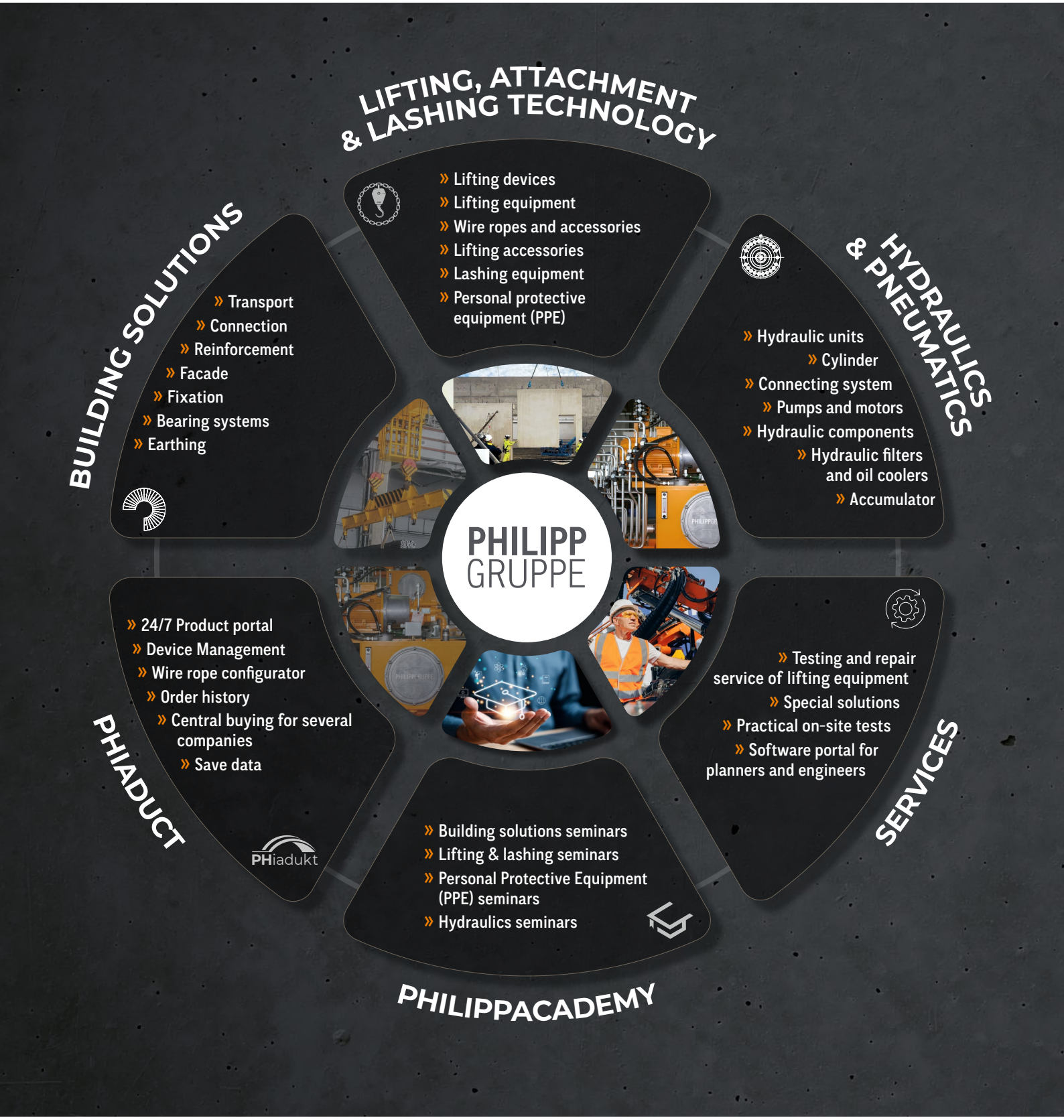

TABLE OF CONTENTS

CAST-IN ANCHOR CHANNEL SYSTEMS 4
- » The sophisticated fixing solution for modern concrete construction
- » FES-C - Cold-formed Cast-in anchor channels
- » FES-H - Hot-rolled anchor channels
- » InnoLock FES-RS-S - The next generation

PHILIPP LAB 6
- » Software solutions for the concrete precast industry

CHANNEL PHix 7
- » Software solution for the design of Cast-in anchor channels

SYSTEM OVERVIEW 8
- » Cast-in anchor channels and channel bolts

PRODUCT COMPARISON 10
- » Cast-in anchor channels » Channel bolts

CAST-IN ANCHOR CHANNELS 14
- » Cold-formed - FES-C » Hot-rolled - FES-H / FES-H-P / FES-H-S » Roll-shaped InnoLock FES-RS-S
- » Custom-made solutions

CHANNEL BOLTS 22
- » Plain - FBC » Notched - FBC-N » Serrated - FBC-S / InnoLock FBC-S

CAST-IN ANCHOR CHANNEL SYSTEMS

The sophisticated fixing solution for modern concrete construction

With the Cast-in anchor channels from fischer, you benefit from high security, flexible fixing options and cost-effective installation processes. Through integration during the concreting process creates permanently adjustable fixing points for demanding applications in the precast concrete sector, building construction, infrastructure construction and industrial construction.

In contrast to retrofitted fixings, Cast-in anchor channels enable fast, low-dust installation without the need for time-consuming drilling. This reduces assembly times, avoids conflicts with reinforcements and creates maximum planning security on the construction site.

A range of products for every requirement

The fischer Cast-in anchor channel portfolio includes three powerful system families:

FES-C – Cold-formed anchor channels

The economical solution for a wide range of standard applications. FES-C channels offer high tensile and shear load capacities as well as a permanently adjustable fixing option in cracked and uncracked concrete.

FES-H – Hot-rolled anchor channels

For the highest demands on load capacity, safety and flexibility. The hot-rolled profiles convince with their load-bearing capacity in all directions and are especially suited to demanding applications in facade, infrastructure and industrial fixings.

InnoLock FES-RS-S – The next generation

The innovative roll-shaped Cast-in anchor channel sets new standards in fixing technology. The unique serration, combined with the specially developed InnoLock channel bolts, creates form-fit connections with outstanding load-bearing capacity in the longitudinal direction of the channel. The result: maximum safety, exceptional load-bearing capacity and permanent adjustability.

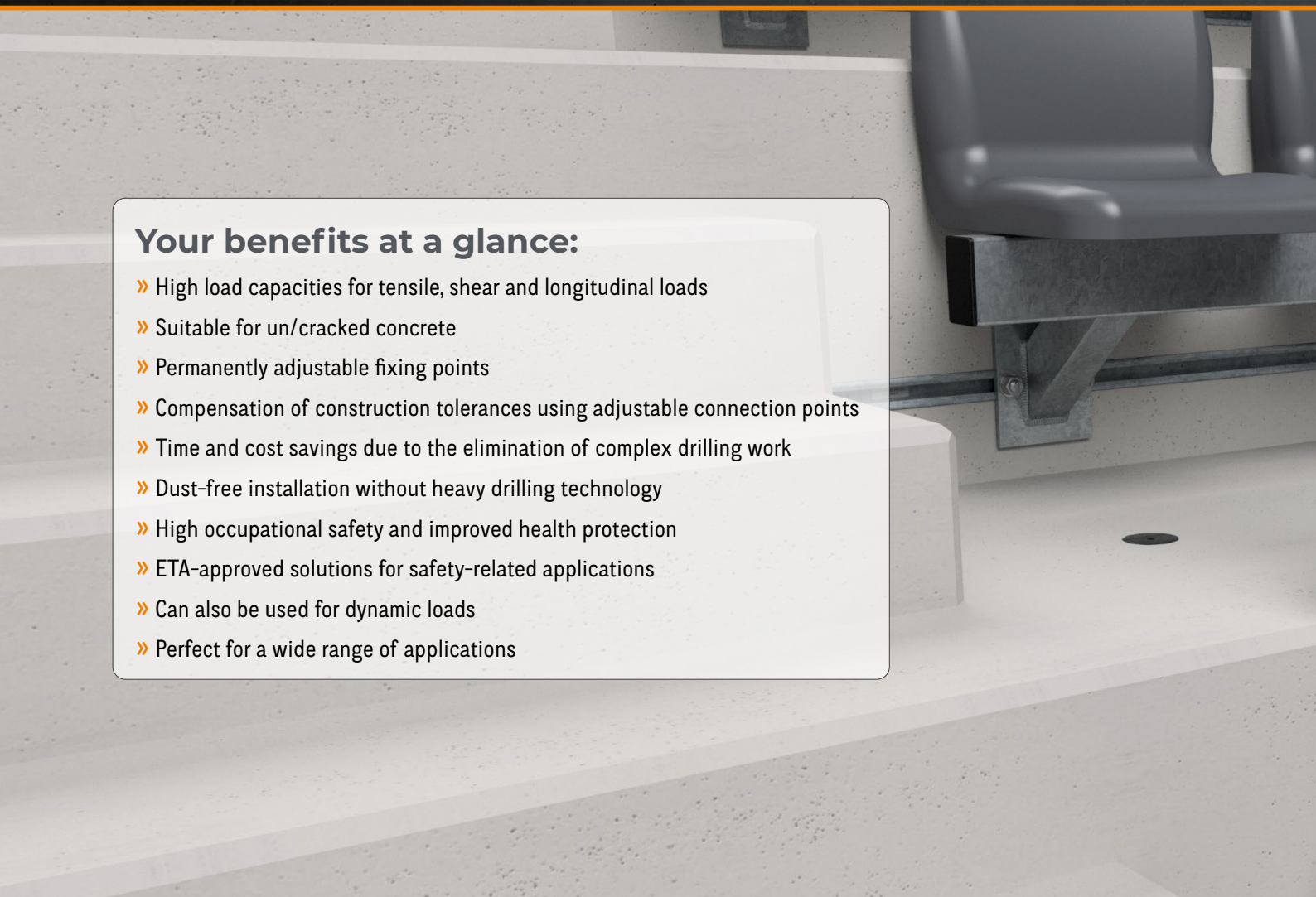

Your benefits at a glance:

- High load capacities for tensile, shear and longitudinal loads
- Suitable for un/cracked concrete
- Permanently adjustable fixing points
- Compensation of construction tolerances using adjustable connection points
- Time and cost savings due to the elimination of complex drilling work
- Dust-free installation without heavy drilling technology
- High occupational safety and improved health protection
- ETA-approved solutions for safety-related applications
- Can also be used for dynamic loads
- Perfect for a wide range of applications

Perfect for a wide range of applications

- Facades and unitised facades
- Precast concrete units
- Lift fixations
- Industrial and energy plants
- Subway and railway construction
- Tunnelling
- HVAC&R installations
- Sound protection walls and traffic control systems
- Machinery and plant fixings
- Stadiums, airports and transport structures

Safety through tested system technology

All anchor channels have European Technical Assessments (ETA) and meet the highest standards in design and construction. For particularly demanding applications, additional solutions are available to meet fire resistance requirements, dynamic loads and versions made of corrosion-resistant stainless steel.

Plan economically. Install flexibly. Ensure long-term safety.

fischer Cast-in anchor channels provide planners, precast manufacturers and contractors with a high-performance fixing solution that combines planning reliability, installation efficiency and maximum load capacity in a single product. From standard economical solutions to heavy-duty InnoLock technology, fischer offers the right Cast-in anchor channel for every requirement.

Our design tool is available at
www.philipp-software.de



PHILIPP LAB

Software solutions for the prefabricated building

» **PHacade**	The modern way to design anchor systems for sandwich facades
» **POWER connectors**	Quick design of certified connections with flexible wire rope loops
» **StepPHix**	Design of transport anchors for single-flight stairs
» **CAD-library**	Model data (2-D/3-D) available in various export formats for different CAD systems
» **PHixation**	Permanent fixation of any constructions to precast concrete members with the PB anchor
» **CHANNEL PHix**	Professional design of anchor channels of all types
PHiTT	Efficient design of slotted plates or beam connections with heavy-duty steel supports

- » Faster access to software tools from PHILIPP Building Solutions
- » Simple and clearly structured portal - everything at a glance
- » Optimised and powerful tools - from and for planners
- » For greater efficiency in the design of parts in precast constructions
- » Free access to all software tools after a quick registration

NOW
register
and start
immediately!



CHANNEL PHix

Software solution for the design of anchor channels



Digital design of anchor channels

With the browser-based design software for anchor channels you plan quickly, safely and efficiently. The application is available to you directly within the PHILIPP Lab – no installation required, and ready to use at any time.

THE **NEW** CHANNEL PHix

The CHANNEL-PHix design software offers you a user-friendly and reliable way to verify cast-in anchor channels. Various combinations of anchor plates, concrete grades, loads, anchor channels and additional reinforcement can be easily modelled and optimised for your specific fixing scenario.

PDF reports can be created in either detailed or short form for documentation and review purposes.

Your advantages

» **Web-based in PHILIPP Lab**
- no installation required

» **User-friendly operation**
- quick to understand
- easy to use

» **Efficient planning**
- saves time
- reduces sources of errors

» **Practical results**
- for planning and documentation

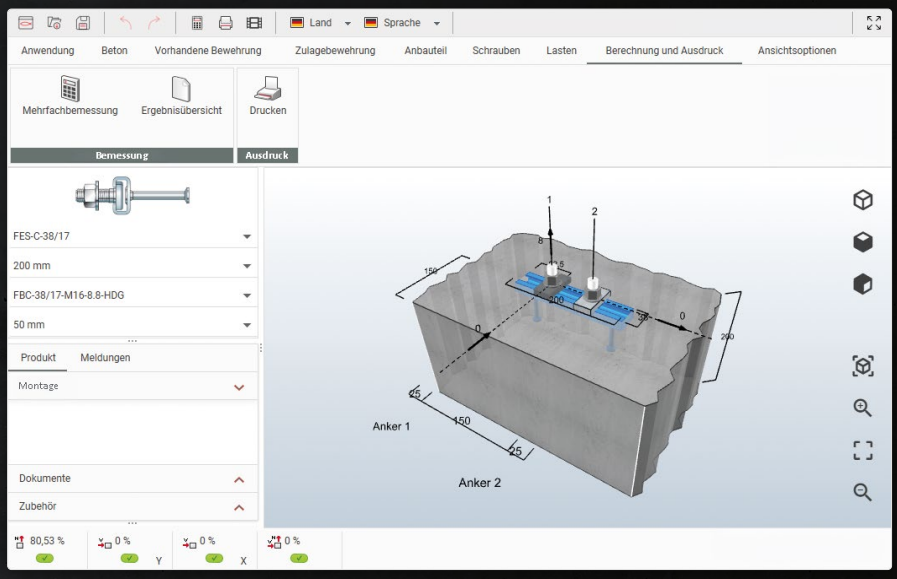

FROM PLANNING TO VERIFICATION

Inputs

» **Only few entries**– quickly to a result

Design

» **Multiple design** – ideal for comparing variants

Report

» **Clear report included**

The CHANNEL-PHix software supports you from the very first data entry right through to the final documentation – reliably and efficiently.

SYSTEM OVERVIEW

Cast-in anchor channels and channel bolts

CAST-IN ANCHOR CHANNELS				
cold formed, with studs				
FES-C-28/15	FES-C-38/17	FES-C-40/25	FES-C-49/30	FES-C-54/33
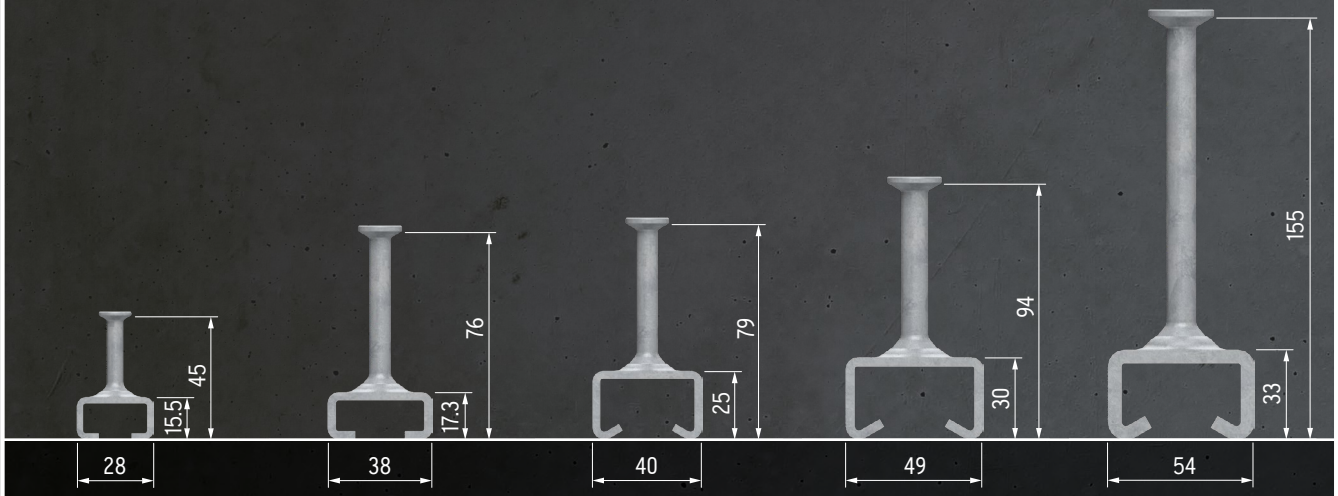				
CHANNEL BOLT				
FBC-28/15	FBC-38/17	FBC-40/22	FBC-50/30	FBC-50/30
M10 - M16	M10 - M16	M16	M16	M16

CAST-IN ANCHOR CHANNELS				
hot-rolled, with studs			hot-rolled, with studs, plus load-bearing capacity	
FES-H-40/22	FES-H-50/30	FES-H-52/34	FES-H-40/22-P	FES-H-50/30-P
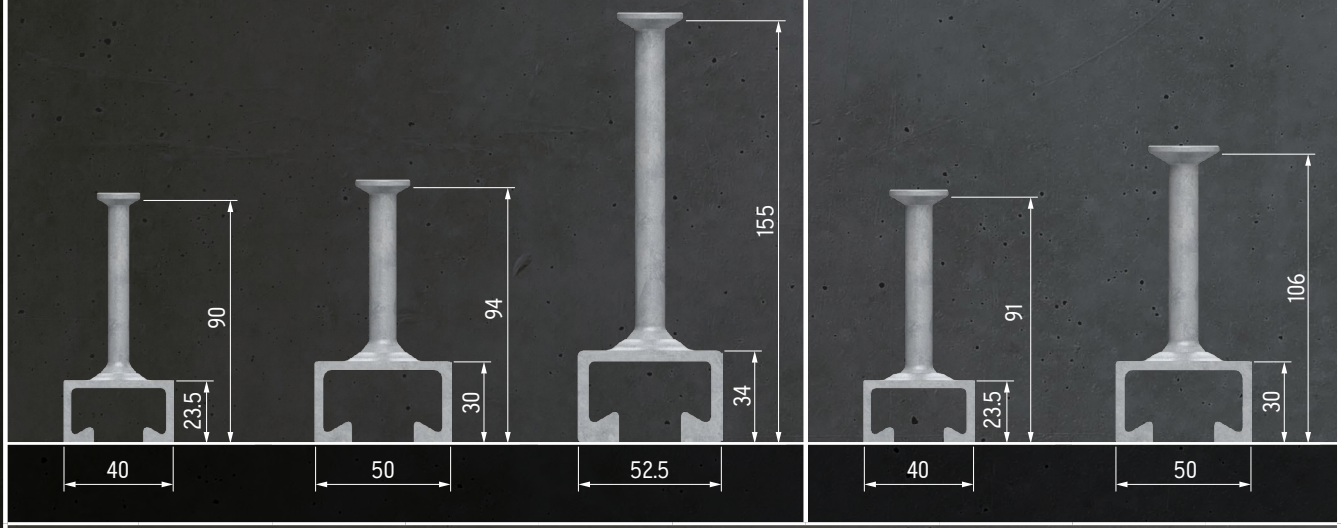				

CHANNEL BOLT									
FBC-40/22	FBC-N-40/22	FBC-50/30	FBC-N-50/30	FBC-50/30	FBC-N-50/30	FBC-40/22	FBC-N-40/22	FBC-50/30	FBC-N-50/30
M16	M16	M16	M16	M16	M16	M16	M16	M16	M16

CAST-IN ANCHOR CHANNELS				
hot-rolled, serrated, with studs		hot-rolled (InnoLock), serrated, with studs		
FES-H-S-29/20	FES-H-S-38/23	FES-RS-S-500	FES-RS-S-600	FES-RS-S-700
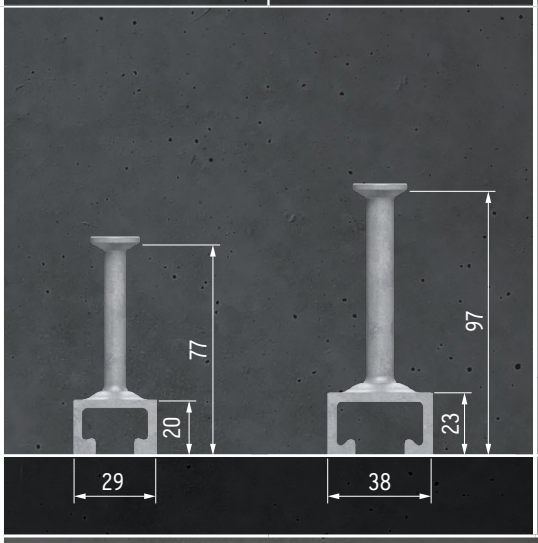		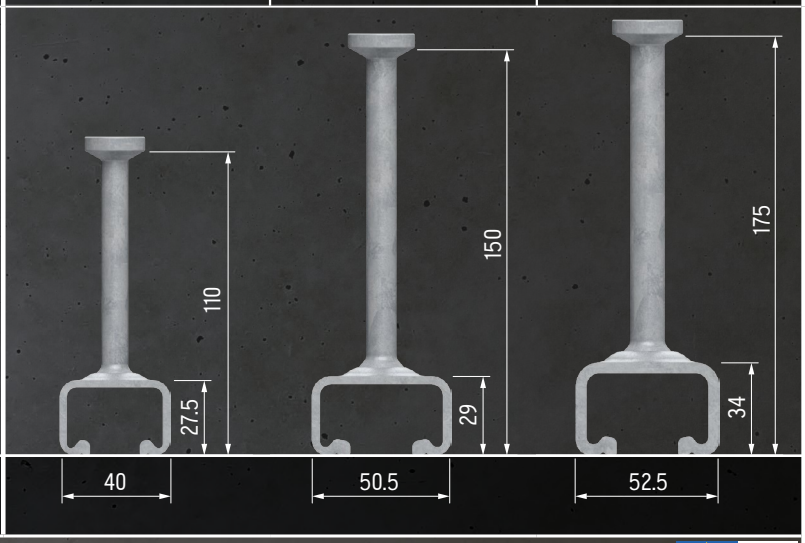		
CHANNEL BOLT				
FBC-S-29/20	FBC-S-38/23	FBC-S-180	FBC-S-225	FBC-S-225
M10 - M16	M10 - M16	M16 - M20	M16 - M20	M16 - M20

MAGNETIC FASTENER FOR CAST-IN ANCHOR CHANNELS

- Quick and easy fixing of anchor channels to steel formwork
- High adhesive force for secure hold during the concreting process
- Flexible positioning and adjustable channel position at any time
- The channel remains sealed while the foam filler stays in place
- Reusable design for economical and sustainable use





The PHILIPP Magnetic fastener secures anchor channels to steel formwork quickly, safely and flexibly. It enables position corrections, keeps the channel sealed by retaining the foam filler inside the channel and is quickly removable as well as reusable after concreting.

The result:

Shorter set-up times, clean workflows and economical processing.

CAST-IN ANCHOR CHANNELS AT A GLANCE

TYPE OF CONSTRUCTION	COLD-FORMED STUDS	HOT-ROLLED STUDS	
PRODUCT	FES-C	FES-H	
			
CHARACTERISTICS	Pre-positioned, adjustable solution	High strength and safety	
ACTIONS			
Vertical	●	●	
Right-angled	-	●	
Longitudinal	-	- ①	
Seismic load	-	50/30 / 52/34 ②	
Dynamic load	-	-	
CONCRETE			
Concrete grades	C12/15 up to C90/105	C12/15 up to C90/105	
Cracked and uncracked concrete	●	●	
APPLICATIONS (suitable for all types of buildings or structures)			
Facade	●	●	
Prefabricated elements	●	●	
Railways	●	●	
Underground tunnels and train stations	●	●	
Industrial applications	●	●	
TECHNICAL INFORMATION			
Technical basis	ETA-18/0862	ETA-18/0862	
Max. fire resistance	R 120 (from C20/25 to C50/60)	R 120 (from C20/25 to C50/60)	
CHANNEL BOLT			
FBC (default)	●	●	
FBC-S-225 (InnoLock, serrated)	-	-	
FBC-N (notched)	-	●	
FBC-S (serrated)	-	-	

① Longitudinal bearing capacity in combination with channel bolts FBC-N.
② With channel bolt FBC-N (with notched tooth)

	HOT-ROLLED STUDS (PLUS LOAD-BEARING CAPACITY)	HOT-ROLLED STUDS, SERRATED	HOT-ROLLED STUDS, SERRATED
	FES-H-P	FES-H-S	InnoLock FES-RS-S
		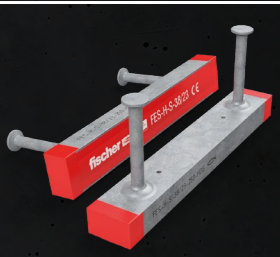	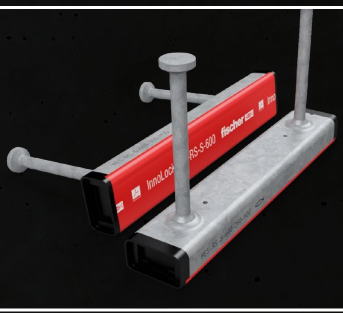
	Plus anchorage for higher load transfer	Serrated channel for optimum bearing capacity	Stepped lip + InnoLock channel bolt
	●	●	●
	●	●	●
	- ①	●	●
	-	38/23	-
	-	-	●
	C12/15 up to C90/105	C12/15 up to C90/105	C12/15 up to C90/105
	●	●	●
	●	●	●
	●	●	●
	●	●	●
	●	●	●
	●	●	●
	ETA-18/0862	ETA-18/0862	ETA-22/0035
	R 120 (from C20/25 to C50/60)	**R 120** (from C20/25 to C50/60)	**R 120** (from C20/25 to C50/60)
	●	-	-
	-	-	●
	●	-	-
	-	●	-

● suitable | – not intended use

CHANNEL BOLTS AT A GLANCE

TYPE OF CONSTRUCTION	CHANNEL BOLT (STANDARD)	SERRATED
PRODUCT	FBC	FBC-S
		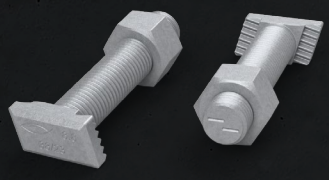
CHARACTERISTICS	Plain channel bolt, load-bearing capacity in two directions	Serrated channel bolt, high load-bearing capacity in longitudinal channel direction
SIZES		
Thread ①	M10 / M12 / M16	M10 / M12 / M16
Length (mm) ①	30 / 40 / 50 / 60	30 / 40 / 50 / 60
ACTIONS		
Vertical	-	●
Right-angled	●	●
Longitudinal	-	●
Dynamic load	-	-
MATERIAL / STRENGTH CLASS		
Steel (hot-dip galvanised)	8.8	8.8
TECHNICAL INFORMATION		
Technical basis	ETA-18/0862	ETA-18/0862
Max. fire resistance	R 120	R 120
CAST-IN ANCHOR CHANNELS		
FES-C	●	-
FES-H	●	-
FES-H-P	●	-
FES-H-S	-	●
InnoLock FES-RS-S	-	-

① Other dimensions on request

	CHANNEL BOLT	
	NOTCHED	SERRATED
	FBC-N	InnoLock FBC-S
		
	Notched channel bolt, for hot-rolled channels without teeth	Special toothing, form-fit connection for high load-bearing capacity
	M16	M16 / M20
	50 / 60	50 / 60 / 80 / 100
	●	●
	●	●
	●	●
	-	●
	8.8	8.8
	ETA-18/0862	ETA-22/0035
	R 120	R 120
	-	-
	●	-
	●	-
	-	-
	-	●

● suitable | – not intended use

CAST-IN ANCHOR CHANNELS



FES-C – cold-formed Page 15
FES-H – hot-rolled Page 17
FES-H-P – hot-rolled Page 18
FES-H-S – hot-rolled Page 19
InnoLock FES-RS-S – rolled-forged Page 20

Cast-in anchor channels cold-formed with studs

VERSION: 28/15 COLD-FORMED WITH STUDS, HOT-DIP GALVANISED

Name	Length (mm)	Anchorage depth (mm)	No. of studs (pc.)	PU (pc.)	Ref. no.
FES-C-28/15-100	100	47	2	200	8228150100FV
FES-C-28/15-150	150	47	2	140	8228150150FV
FES-C-28/15-200	200	47	2	100	8228150200FV
FES-C-28/15-250	250	47	2	85	8228150250FV
FES-C-28/15-300	300	47	3	70	8228150300FV
FES-C-28/15-350	350	47	3	60	8228150350FV
FES-C-28/15-450	450	47	3	40	8228150450FV
FES-C-28/15-500	500	47	4	30	8228150500FV
FES-C-28/15-850	850	47	5	120	8228150850FV
FES-C-28/15-1050	1050	47	6	120	8228151050FV
FES-C-28/15-3050	3050	47	16	120	8228153050FV
FES-C-28/15-6070	6070	47	31	120	8228156070FV

- With elastic foam and integrated trigger line
- Special lengths available on request

ANCHOR CHANNEL 28/15



VERSION: 38/17 COLD-FORMED WITH STUDS, HOT-DIP GALVANISED

Name	Length (mm)	Anchorage depth (mm)	No. of studs (pc.)	PU (pc.)	Ref. no.
FES-C-38/17-100	100	78	2	105	8238170100FV
FES-C-38/17-150	150	78	2	70	8238170150FV
FES-C-38/17-200	200	78	2	45	8238170200FV
FES-C-38/17-250	250	78	2	40	8238170250FV
FES-C-38/17-300	300	78	3	35	8238170300FV
FES-C-38/17-350	350	78	3	30	8238170350FV
FES-C-38/17-450	450	78	3	20	8238170450FV
FES-C-38/17-500	500	78	4	15	8238170500FV
FES-C-38/17-850	850	78	5	104	8238170850FV
FES-C-38/17-1050	1050	78	6	104	8238171050FV
FES-C-38/17-3050	3050	78	16	104	8238173050FV
FES-C-38/17-6070	6070	78	31	78	8238176070FV

- With elastic foam and integrated trigger line
- Special lengths available on request

ANCHOR CHANNEL 38/17



VERSION: 40/25 COLD-FORMED WITH STUDS, HOT-DIP GALVANISED

Name	Length (mm)	Anchorage depth (mm)	No. of studs (pc.)	PU (pc.)	Ref. no.
FES-C-40/25-150	150	79	2	60	8240250150FV
FES-C-40/25-200	200	79	2	40	8240250200FV
FES-C-40/25-250	250	79	2	35	8240250250FV
FES-C-40/25-300	300	79	2	30	8240250300FV
FES-C-40/25-350	350	79	3	25	8240250350FV
FES-C-40/25-400	400	79	3	15	8240250400FV
FES-C-40/25-550	550	79	3	12	8240250550FV
FES-C-40/25-800	800	79	4	12	8240250800FV
FES-C-40/25-1050	1050	79	5	96	8240251050FV
FES-C-40/25-3050	3050	79	13	96	8240253050FV
FES-C-40/25-6070	6070	79	25	48	8240256070FV

- With elastic foam and integrated trigger line
- Special lengths available on request

ANCHOR CHANNEL 40/25



CAST-IN ANCHOR CHANNELS

Cast-in anchor channels cold-formed with studs

VERSION: 49/30 COLD-FORMED, HOT-DIP GALVANISED

Description	Length (mm)	Anchorage depth (mm)	No. of studs (pc.)	PU (pc.)	Ref. no.
FES-C-49/30-150	150	96	2	40	8249300150FV
FES-C-49/30-200	200	96	2	30	8249300200FV
FES-C-49/30-250	250	96	2	25	8249300250FV
FES-C-49/30-300	300	96	2	25	8249300300FV
FES-C-49/30-350	350	96	3	20	8249300350FV
FES-C-49/30-400	400	96	3	12	8249300400FV
FES-C-49/30-550	550	96	3	8	8249300550FV
FES-C-49/30-800	800	96	4	8	8249300800FV
FES-C-49/30-1050	1050	96	5	80	8249301050FV
FES-C-49/30-3050	3050	96	13	80	8249303050FV
FES-C-49/30-6070	6070	96	25	40	8249306070FV

- With elastic foam and integrated trigger line
- Special lengths available on request

ANCHOR CHANNEL 49/30



VERSION: 54/33 COLD-FORMED, HOT-DIP GALVANISED

Description	Length (mm)	Anchorage depth (mm)	No. of studs (pc.)	PU (pc.)	Ref. no.
FES-C-54/33-150	150	158	2	25	8254330150FV
FES-C-54/33-200	200	158	2	15	8254330200FV
FES-C-54/33-250	250	158	2	13	8254330250FV
FES-C-54/33-300	300	158	2	12	8254330300FV
FES-C-54/33-350	350	158	3	10	8254330350FV
FES-C-54/33-400	400	158	3	6	8254330400FV
FES-C-54/33-550	550	158	3	6	8254330550FV
FES-C-54/33-800	800	158	4	5	8254330800FV
FES-C-54/33-1050	1050	158	5	60	8254331050FV
FES-C-54/33-3050	3050	158	13	60	8254333050FV
FES-C-54/33-6070	6070	158	25	20	8254336070FV

- With elastic foam and integrated trigger line
- Special lengths available on request

ANCHOR CHANNEL 54/33

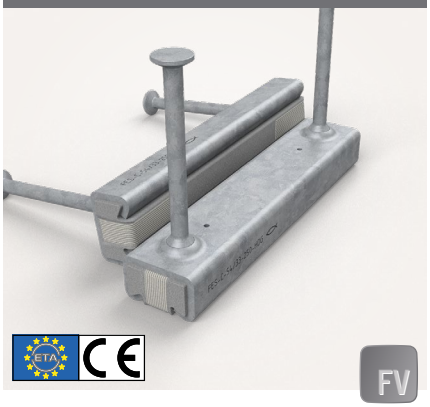

Cast-in anchor channels hot-rolled with studs

VERSION: 40/22 HOT-ROLLED WITH STUDS, HOT-DIP GALVANISED

Description	Length (mm)	Anchorage depth (mm)	No. of studs (pc.)	PU (pc.)	Ref. no.
FES-H-40/22-150	150	92	2	45	8240220150FV
FES-H-40/22-200	200	92	2	30	8240220200FV
FES-H-40/22-250	250	92	2	25	8240220250FV
FES-H-40/22-300	300	92	2	25	8240220300FV
FES-H-40/22-350	350	92	3	20	8240220350FV
FES-H-40/22-400	400	92	3	15	8240220400FV
FES-H-40/22-550	550	92	3	10	8240220550FV
FES-H-40/22-800	800	92	4	10	8240220800FV
FES-H-40/22-1050	1050	92	5	96	8240221050FV
FES-H-40/22-3050	3050	92	13	96	8240223050FV
FES-H-40/22-6070	6070	92	25	48	8240226070FV

- With elastic foam and integrated trigger line
- Special lengths available on request

ANCHOR CHANNEL 40/22



VERSION: 50/30 HOT-ROLLED WITH STUDS, HOT-DIP GALVANISED

Description	Length (mm)	Anchorage depth (mm)	No. of studs (pc.)	PU (pc.)	Ref. no.
FES-H-50/30-150	150	96	2	40	8250300150FV
FES-H-50/30-200	200	96	2	25	8250300200FV
FES-H-50/30-250	250	96	2	20	8250300250FV
FES-H-50/30-300	300	96	2	20	8250300300FV
FES-H-50/30-350	350	96	3	15	8250300350FV
FES-H-50/30-400	400	96	3	12	8250300400FV
FES-H-50/30-450	450	96	3	12	8250300450FV
FES-H-50/30-550	550	96	3	8	8250300550FV
FES-H-50/30-800	800	96	4	8	8250300800FV
FES-H-50/30-1050	1050	96	5	80	8250301050FV
FES-H-50/30-3050	3050	96	13	80	8250303050FV
FES-H-50/30-6070	6070	96	25	40	8250306070FV

- With elastic foam and integrated trigger line
- Special lengths available on request

ANCHOR CHANNEL 50/30

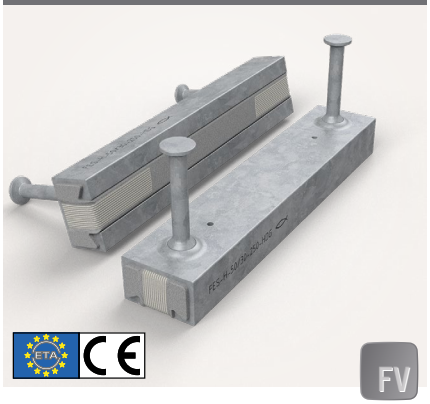

VERSION: 52/34 HOT-ROLLED WITH STUDS, HOT-DIP GALVANISED

Description	Length (mm)	Anchorage depth (mm)	No. of studs (pc.)	PU (pc.)	Ref. no.
FES-H-52/34-170	170	158	2	24	8252340170FV
FES-H-52/34-200	200	158	2	15	8252340200FV
FES-H-52/34-250	250	158	2	13	8252340250FV
FES-H-52/34-300	300	158	2	12	8252340300FV
FES-H-52/34-350	350	158	3	10	8252340350FV
FES-H-52/34-400	400	158	3	6	8252340400FV
FES-H-52/34-550	550	158	3	6	8252340550FV
FES-H-52/34-800	800	158	4	5	8252340800FV
FES-H-52/34-1050	1050	158	5	80	8252341050FV
FES-H-52/34-3050	3050	158	13	80	8252343050FV
FES-H-52/34-6070	6070	158	25	20	8252346070FV

- With elastic foam and integrated trigger line
- Special lengths available on request

ANCHOR CHANNEL 52/34



CAST-IN ANCHOR CHANNELS

Cast-in anchor channels hot-rolled with studs (plus bearing capacity)

VERSION: 40/22-P HOT-ROLLED WITH STUDS, HOT-DIP GALVANISED

Description	Length (mm)	Anchorage depth (mm)	No. of studs (pc.)	PU (pc.)	Ref. no.
FES-H-40/22-P-150	150	93	2	45	8240220150FVP
FES-H-40/22-P-200	200	93	2	30	8240220200FVP
FES-H-40/22-P-250	250	93	2	25	8240220250FVP
FES-H-40/22-P-300	300	93	2	25	8240220300FVP
FES-H-40/22-P-350	350	93	3	20	8240220350FVP
FES-H-40/22-P-400	400	93	3	15	8240220400FVP
FES-H-40/22-P-550	550	93	3	10	8240220550FVP
FES-H-40/22-P-800	800	93	4	10	8240220800FVP
FES-H-40/22-P-1050	1050	93	5	96	8240221050FVP
FES-H-40/22-P-3050	3050	93	13	96	8240223050FVP
FES-H-40/22-P-6070	6070	93	25	48	8240226070FVP

- With elastic foam and integrated trigger line
- Special lengths available on request

ANCHOR CHANNEL 40/22-P



VERSION: 50/30-P HOT-ROLLED WITH STUDS, HOT-DIP GALVANISED

Description	Length (mm)	Anchorage depth (mm)	No. of studs (pc.)	PU (pc.)	Ref. no.
FES-H-50/30-P-170	170	109	2	25	8250300170FVP
FES-H-50/30-P-200	200	109	2	15	8250300200FVP
FES-H-50/30-P-250	250	109	2	13	8250300250FVP
FES-H-50/30-P-300	300	109	2	12	8250300300FVP
FES-H-50/30-P-350	350	109	3	10	8250300350FVP
FES-H-50/30-P-400	400	109	3	6	8250300400FVP
FES-H-50/30-P-550	550	109	3	6	8250300550FVP
FES-H-50/30-P-800	800	109	4	5	8250300800FVP
FES-H-50/30-P-1050	1050	109	5	60	8250301050FVP
FES-H-50/30-P-3050	3050	109	13	60	8250303050FVP
FES-H-50/30-P-6070	6070	109	25	20	8250306070FVP

- With elastic foam and integrated trigger line
- Special lengths available on request

ANCHOR CHANNEL 50/30-P

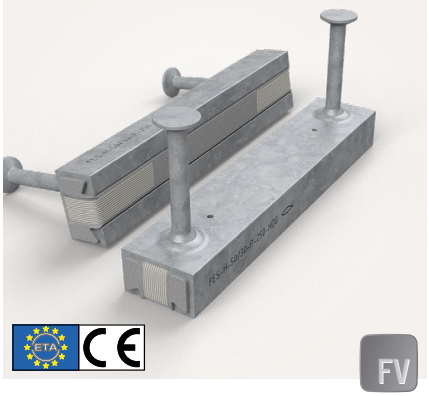

Cast-in anchor channels hot-rolled, serrated with studs

VERSION: 29/20-S HOT-ROLLED WITH STUDS, HOT-DIP GALVANISED

Description	Length (mm)	Anchorage depth (mm)	No. of studs (pc.)	PU (pc.)	Ref. no.
FES-H-S-29/20-150	150	80	2	65	8229200150FV
FES-H-S-29/20-200	200	80	2	50	8229200200FV
FES-H-S-29/20-250	250	80	2	40	8229200250FV
FES-H-S-29/20-300	300	80	3	30	8229200300FV
FES-H-S-29/20-350	350	80	3	30	8229200350FV
FES-H-S-29/20-400	400	80	3	20	8229200400FV
FES-H-S-29/20-500	500	80	4	15	8229200500FV
FES-H-S-29/20-850	850	80	4	136	8229200850FV
FES-H-S-29/20-1050	1050	80	5	136	8229201050FV
FES-H-S-29/20-3050	3050	80	13	136	8229203050FV
FES-H-S-29/20-6070	6070	80	25	68	8229206070FV

- With elastic foam and integrated trigger line
- Special lengths available on request

ANCHOR CHANNEL 29/20-S, SERRATED



VERSION: 38/23-S HOT-ROLLED WITH STUDS, HOT-DIP GALVANISED

Description	Length (mm)	Anchorage depth (mm)	No. of studs (pc.)	PU (pc.)	Ref. no.
FES-H-S-38/23-150	150	99	2	45	8238230150FV
FES-H-S-38/23-200	200	99	2	30	8238230200FV
FES-H-S-38/23-250	250	99	2	30	8238230250FV
FES-H-S-38/23-300	300	99	2	25	8238230300FV
FES-H-S-38/23-350	350	99	3	20	8238230350FV
FES-H-S-38/23-400	400	99	3	15	8238230400FV
FES-H-S-38/23-550	550	99	3	12	8238230550FV
FES-H-S-38/23-850	850	99	5	104	8238230850FV
FES-H-S-38/23-1050	1050	99	5	104	8238231050FV
FES-H-S-38/23-3050	3050	99	13	104	8238233050FV
FES-H-S-38/23-6070	6070	99	25	52	8238236070FV

- With elastic foam and integrated trigger line
- Special lengths available on request

ANCHOR CHANNEL 38/23-S, SERRATED



CAST-IN ANCHOR CHANNELS

Cast-in anchor channels InnoLock, serrated with studs

VERSION: 500-S ROLL-SHAPED, WITH STUDS, HOT-DIP GALVANISED

Description	Length (mm)	Anchorage depth (mm)	No. of studs (pc.)	PU (pc.)	Ref. no.
FES-RS-S-500-160	160	110	2	18	825000160FV
FES-RS-S-500-210	210	110	2	14	825000210FV
FES-RS-S-500-260	260	110	2	12	825000260FV
FES-RS-S-500-310	310	110	2	12	825000310FV
FES-RS-S-500-360	360	110	3	7	825000360FV
FES-RS-S-500-410	410	110	3	7	825000410FV
FES-RS-S-500-560	560	110	3	6	825000560FV

- With elastic foam and integrated trigger line

FES-RS-S-500, SERRATED



VERSION: 600-S ROLL-SHAPED, WITH STUDS, HOT-DIP GALVANISED

Description	Length (mm)	Anchorage depth (mm)	No. of studs (pc.)	PU (pc.)	Ref. no.
FES-RS-S-600-160	160	150	2	18	826000160FV
FES-RS-S-600-210	210	150	2	14	826000210FV
FES-RS-S-600-260	260	150	2	12	826000260FV
FES-RS-S-600-310	310	150	2	12	826000310FV
FES-RS-S-600-360	360	150	3	7	826000360FV
FES-RS-S-600-410	410	150	3	7	826000410FV
FES-RS-S-600-560	560	150	3	6	826000560FV

- With elastic foam and integrated trigger line

FES-RS-S-600, SERRATED



VERSION: 700-S ROLL-SHAPED, WITH STUDS, HOT-DIP GALVANISED

Description	Length (mm)	Anchorage depth (mm)	No. of studs (pc.)	PU (pc.)	Ref. no.
FES-RS-S-700-160	160	175	2	18	827000160FV
FES-RS-S-700-210	210	175	2	14	827000210FV
FES-RS-S-700-260	260	175	2	12	827000260FV
FES-RS-S-700-310	310	175	2	12	827000310FV
FES-RS-S-700-360	360	175	3	7	827000360FV
FES-RS-S-700-410	410	175	3	7	827000410FV
FES-RS-S-700-560	560	175	3	6	827000560FV

- With elastic foam and integrated trigger line

FES-RS-S-700, SERRATED



CUSTOM-MADE SOLUTIONS

Cast-in anchor channels hot-rolled, serrated with studs

For demanding applications in tunnel construction and wastewater treatment plants as well as for curved walls, fischer offers curved anchor channels as well as custom-made solutions adapted to the requirements of your specific application.

In addition to curved anchor channels, these special products also include channels with various anchorages and other solutions.

Channel installation inwards

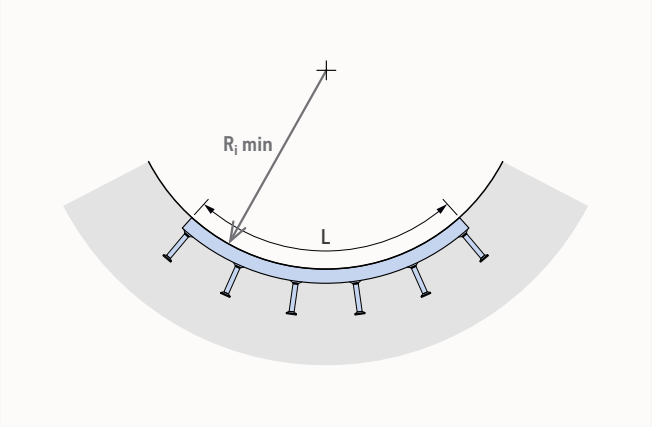

Channel installation outwards

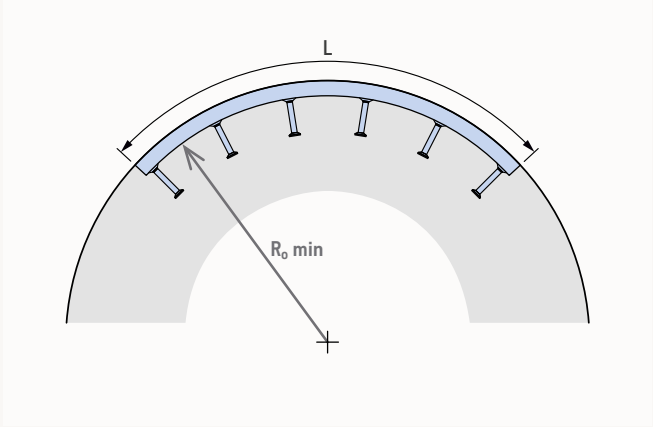

RECOMMENDED MINIMUM BENDING RADIUS

Profiles	R_i min (m)	R_o min (m)	L min (m)	L max (m)
Hot-rolled - standard				
40/22	0.80	2.10	1.50	5.80
50/30	0.80	2.10	1.50	5.80
52/34	0.80	3.60	1.50	5.80
Hot-rolled - serrated				
29/20	0.55	1.80	0.50	5.80
38/23	0.70	2.10	0.50	5.80

CHANNEL BOLTS



FBC - plain Page 23
FBC-N – notched Page 24
FBC-S – serrated Page 25
InnoLock FBC-S – serrated Page 26

Channel bolts

CHANNEL BOLT FBC-28/15 (INCL. NUT)

Length (mm)	Ref. no. 82FBC2815... M10 Ref. no.	M12 Ref. no.	M16 Ref. no.
Hot-dip galvanised 8.8			
30	...10030FV	...12030FV	...16030FV
40	...10040FV	...12040FV	...16040FV
50	...10050FV	...12050FV	...16050FV
60	...10060FV	...12060FV	...16060FV

- Other dimensions available on request
- Can be used for channel sizes: FES-C-28/15

CHANNEL BOLT



CHANNEL BOLT FBC-38/17 (INCL. NUT)

Length (mm)	Ref. no. 82FBC3817... M10 Ref. no.	M12 Ref. no.	M16 Ref. no.
Hot-dip galvanised 8.8			
30	...10030FV	...12030FV	...16030FV
40	...10040FV	...12040FV	...16040FV
50	...10050FV	...12050FV	...16050FV
60	...10060FV	...12060FV	...16060FV

- Other dimensions available on request
- Can be used for channel sizes: FES-C-38/17

CHANNEL BOLT



CHANNEL BOLT FBC-40/22 (INCL. NUT)

Length (mm)	Ref. no. 82FBC4022... M16 Ref. no.
Hot-dip galvanised 8.8	
50	...16050FV
60	...16060FV

- Other dimensions available on request
- Can be used for channel sizes: FES-C-40/25; FES-H-40/22; FES-H-40/22-P

CHANNEL BOLT



CHANNEL BOLT FBC-50/30 (INCL. NUT)

Length (mm)	Ref. no. 82FBC5030... M16 Ref. no.
Hot-dip galvanised 8.8	
50	...16050FV
60	...16060FV

- Other dimensions available on request
- Can be used for channel sizes: FES-C-49/30; FES-C-54/33; FES-H-50/30 ; FES-H-50/30-P; FES-H-52/34

CHANNEL BOLT



CHANNEL BOLTS

Channel bolts FBC-N

CHANNEL BOLT FBC-N 40/22 (INCL. NUT)	
Length (mm)	Ref. no. 82FBC4022N... M16 Ref. no.
Hot-dip galvanised 8.8	
50	...16050FV
60	...16060FV

- Other dimensions available on request
- Can be used for channel sizes: FES-H-40/22; FES-H-40/22-P

CHANNEL BOLT



CHANNEL BOLT FBC-N 50/30 (INCL. NUT)	
Length (mm)	Ref. no. 82FBC5030N... M16 Ref. no.
Hot-dip galvanised 8.8	
50	...16050FV
60	...16060FV

- Other dimensions available on request
- Can be used for channel sizes: FES-H-50/30; FES-H-50/30-P; FES-H-52/34

CHANNEL BOLT



Channel bolts FBC-S

CHANNEL BOLT FBC-S 29/20 (INCL. NUT)

Length (mm)	Ref. no. 82FBC2920... M10 Ref. no.	M12 Ref. no.	M16 Ref. no.
Hot-dip galvanised 8.8			
30	...10030FV	...12030FV	...16030FV
40	...10040FV	...12040FV	...16040FV
50	...10050FV	...12050FV	...16050FV
60	...10060FV	...12060FV	...16060FV

- Other dimensions available on request
- Can be used for channel sizes: FES-H-S-29/20

CHANNEL BOLT



CHANNEL BOLT FBC-S 38/23 (INCL. NUT)

Length (mm)	Ref. no. 82FBC3823... M10 Ref. no.	M12 Ref. no.	M16 Ref. no.
Hot-dip galvanised 8.8			
30	...10030FV	...12030FV	...16030FV
40	...10040FV	...12040FV	...16040FV
50	...10050FV	...12050FV	...16050FV
60	...10060FV	...12060FV	...16060FV

- Other dimensions available on request
- Can be used for channel sizes: FES-H-S-38/23

CHANNEL BOLT



CHANNEL BOLTS

Channel bolts InnoLock FBC-S

CHANNEL BOLT InnoLock FBC-S 180 (INCL. NUT)

Length (mm)	Ref. no. 82FBC180... M16 Ref. no.	M20 Ref. no.
Hot-dip galvanised 8.8		
50	...16040FV	-
60	...16050FV	...20060FV
80	...16060FV	...20080FV
100	-	...20100FV

- Other dimensions available on request
- Can be used for profile sizes: InnoLock FES-RS-S-500

CHANNEL BOLT

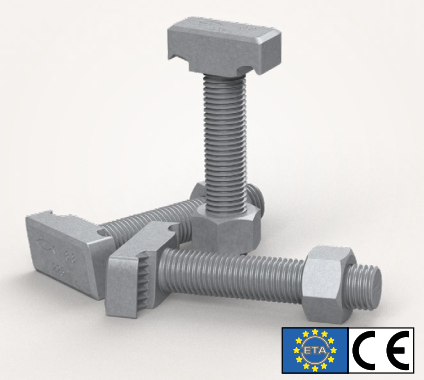

CHANNEL BOLT InnoLock FBC-S 225 (INCL. NUT)

Length (mm)	Ref. no. 82FBC225... M16 Ref. no.	M20 Ref. no.
Hot-dip galvanised 8.8		
50	...16050FV	-
60	...16060FV	...20060FV
80	...16080FV	...20080FV
100	-	...20100FV

- Other dimensions available on request
- Can be used for channel sizes: InnoLock FES-RS-S-600 / FES-RS-S-700

CHANNEL BOLT



fischer × PHILIPPGROUP

HEADQUARTERS
Lilienthalstraße 7-9
63741 Aschaffenburg
+49 6021 4027-0
info@philipp-gruppe.de

PRODUCTION AND LOGISTICS
Hauptstraße 204
63814 Mainaschaff
+49 6021 4027-0
info@philipp-gruppe.de

OFFICE COSWIG
Roßlauer Street. 70
06869 Coswig/Anhalt
+49 34903 694-0
info@philipp-gruppe.de

OFFICE NEUSS
Sperberweg 37
41468 Neuss
+49 2131 35918-0
info@philipp-gruppe.de

OFFICE TANNHEIM
Robert-Bosch-Weg 12
88459 Tannheim/Allgäu
+49 8395 81335-0
info@philipp-gruppe.de

PHILIPP VERTRIEBS GMBH
Pfaffing 36
5760 Saalfelden / Salzburg
+43 6582 70401
info@philipp-gruppe.at

PHILIPP POLSKA SPÓŁKA Z O.O.
ul. Wojska Polskiego 1
47-220 Kędzierzyn-Koźle / Opole
+48 50 3353816
polska@philipp-gruppe.de



HEADQUARTERS Aschaffenburg



Visit us! www.philipp-group.com

VB3-BPÜ-001-en - 10/26 - PDF · PHILIPP GmbH, 63741 Aschaffenburg · Technical changes and errors reserved